震雄集團有限公司

CHEN HSONG HOLDINGS LIMITED

(於百慕達註冊成立之有限公司)

(Incorporated in Bermuda with limited liability)

(股份代號 Stock Code: 00057)

65TH

SINCE 1958

ANNUAL REPORT
年報

2022/23

財務摘要
Financial Highlights

截至二零二三年三月三十一日止年度
Year ended 31 March 2023

		2023	2022	變動 Change
業績摘要(*港幣千元*)	**RESULTS HIGHLIGHTS** *(HK$'000)*			
收益	Revenue	**2,312,584**	2,728,763	-15%
除稅前溢利	Profit before tax	**158,941**	238,568	-33%
本公司權益持有人應佔溢利	Profit attributable to equity holders of the Company	**130,289**	213,309	-39%
資產總值	Total assets	**4,149,309**	4,429,327	-6%
股東權益	Shareholders' funds	**3,049,140**	3,209,049	-5%
已發行股本	Issued share capital	**63,053**	63,053	0%
流動資產淨值	Net current assets	**1,990,404**	2,042,490	-3%
每股數據	**PER SHARE DATA**			
每股基本盈利(*港仙*)	Basic earnings per share *(HK cents)*	**20.7**	33.8	-39%
每股現金股息(*港仙*)	Cash dividends per share *(HK cents)*	**11.8**	16.8	-30%
每股資產淨值(*港元*)	Net assets per share *(HK$)*	**4.9**	5.1	-4%
主要財務比率	**KEY FINANCIAL RATIOS**			
平均股東權益回報率(*%*)	Return on average shareholders' funds *(%)*	**4.2**	6.9	-39%
平均資產總值回報率(*%*)	Return on average total assets *(%)*	**3.0**	4.8	-38%

股東日誌
Shareholders' Calendar

股東周年大會
2023年8月28日(星期一)下午四時正

股東登記冊
暫停辦理股份過戶登記(首尾兩天包括在內)
出席股東周年大會適用 : 2023年8月23日至28日(星期三至星期一)
末期股息適用 : 2023年9月5日至7日(星期二至星期四)

股息(每股)
中期股息 : 港幣4.5仙
派發日期 : 2023年1月12日(星期四)
末期股息 : 港幣7.3仙
派發日期約於 : 2023年9月21日(星期四)

Annual General Meeting (AGM)
28 August 2023 (Mon) at 4:00 p.m.

Register of Members
Closure of Register (both days inclusive)
For attending AGM : 23–28 August 2023 (Wed – Mon)
For Final Dividend : 5–7 September 2023 (Tue – Thur)

Dividend (per Share)
Interim Dividend : HK4.5 cents
Paid on : 12 January 2023 (Thur)
Final Dividend : HK7.3 cents
Payable on or about : 21 September 2023 (Thur)

目錄
Contents

2	六十五周年卓越成就	65 Years of Achievement
6	公司資料	Corporate Information
8	主席報告書	Chairman's Statement
11	管理層之論述及分析	Management's Discussion & Analysis
23	董事之個人資料	Biographical Details of Directors
27	企業管治報告書	Corporate Governance Report
57	董事局報告書	Report of the Directors
81	獨立核數師報告書	Independent Auditor's Report
90	綜合收益表	Consolidated Income Statement
91	綜合全面收益表	Consolidated Statement of Comprehensive Income
92	綜合財務狀況表	Consolidated Statement of Financial Position
94	綜合權益變動表	Consolidated Statement of Changes in Equity
98	綜合現金流量表	Consolidated Statement of Cash Flows
101	財務報表附註	Notes to Financial Statements
224	主要附屬公司	Principal Subsidiaries
227	五年財務摘要	Five-Year Financial Summary
228	投資物業詳情	Particulars of Investment Properties

六十五周年卓越成就
65 Years of Achievement

2023

震雄集團成立65周年，推出旗艦產品線MK6新一代系列，包括MK6「PRO」、MK6「max」及MK6「plus」以及SPARK新一代系列，包括AE全電動、EH電動及HB混電。一經推出，贏得市場一致好評

Chen Hsong celebrated the 65th anniversary. Launched three new members of the flagship MK6 family: the MK6 “PRO”, MK6 “max” and MK6 “plus”. Also launched three new product lines based on the SPARK series -- the AE all-electric, the EH electric and the HB hybrid -- amid overwhelming market responses

2022

震雄集團推出MK6.6系列，包括MK6.6/A「匠心版」、MK6.6/B「卓越版」及MK6.6/C「精工版」。以極高的性價比迅速搶佔市場，為企業發展賦能添勢

Chen Hsong launched three new members of the MK6.6 product line: the MK6.6/A “Artisan”, MK6.6/B “Brilliance” and MK6.6/C “Competence”. They were models with high cost-performance benefits for rapid penetration of key markets

2016

荣 誉 证 书

第十五届（2016）深圳企业创新纪录

经深圳市企业创新纪录审定委员会审定，震雄机械（深圳）有限公司“超霸 6500 吨伺服驱动二板双射台超大型注塑机”项目为“深圳企业创新纪录”。

纪录水平：国内同行首创

项目内容：该司 2016 年研发推出“超霸 6500 吨伺服驱动二板双射台超大型注塑机”，是国内生产的锁模力最大的通用型二板超大型注塑机。

深圳市企业创新纪录审定委员会

二〇一六年十一月二十一日

超霸6,500噸超大型雙射台二板注塑機榮獲深圳企業創新紀錄「產品研發創新項目獎」

Chen Hsong was awarded the “Record of Shenzhen Enterprise Innovation – Award for Innovative Product Development” for its SM6500-TP ultra-large-tonnage two-platen injection moulding machine with dual Y-injectors design

2015 - 2014

震雄機械（深圳）有限公司榮獲「廣東省名牌產品」(2014-17)

Chen Hsong Machinery (Shenzhen) Co., Limited was awarded “Guangdong Top Brand” (2014-17)

深圳市坪山區的震雄工業園（第三期）廠房擴建工程完成，以拓展額外產能

Phase III of Chen Hsong Industrial Park in Pingshan, Shenzhen was completed and provided additional production capacity

2013

超霸4,500噸大型二板注塑機榮獲香港中華廠商聯合會「香港工商業獎：機器及機械工具設計獎」

SM4500-TP large-tonnage two-platen injection moulding machine won the “Hong Kong Awards for Industries: Machinery and Machine Tools Design Award” of The Chinese Manufacturers’ Association of Hong Kong

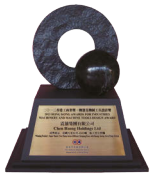

2021 - 2019

震雄集團以強勁的產品創新力，屢創行業標杆，榮獲「FITMI『創新科技』成就大獎 2021」及 SPARK「星火」系列全電動注塑機榮獲「塑料行業 — 榮格技術創新獎2021」

Chen Hsong repeatedly won industry benchmarks with its strong product innovation. Chen Hsong won the "FITMI "Innovative Technology" Achievement Award 2021", and the SPARK series all-electric injection moulding machine won the "Ringier Technology Innovation Awards 2021 – Plastics Industry"

SPARK「星火」系列全電動注塑機及超霸6,500噸超大型雙射台二板注塑機分別勇奪香港中華廠商聯合會二零一九香港工商業獎的「設備及機械設計」類別最高榮譽大獎及優異證書

SPARK series of all-electric injection moulding machine and SM6500-TP ultra-large-tonnage two-platen injection moulding machine with dual Y-injectors design won the Grand Award and Certificate of Merit in the "Equipment and Machinery Design" category of the 2019 Hong Kong Awards for Industries respectively organized by The Chinese Manufacturers' Association of Hong Kong

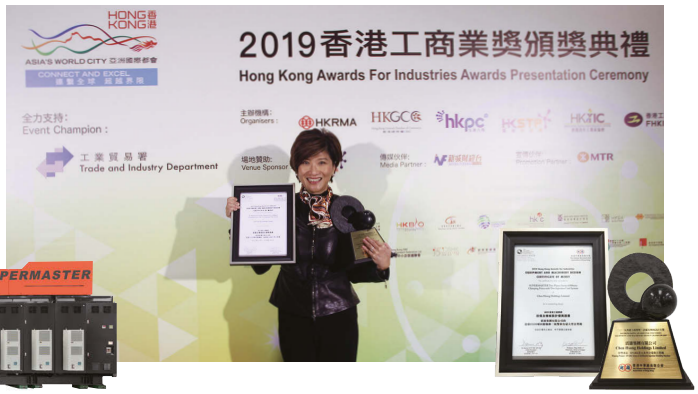

2011

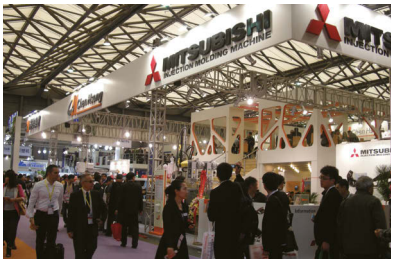

震雄集團與日本三菱重工塑料技術株式會社簽訂二板大型注塑機的技術合作協議

Chen Hsong collaborated with Mitsubishi Heavy Industries Plastic Technology Co., Limited in the development of large-tonnage two-platen machines

2010

佛山市順德區鳳翔震雄工業園廠房正式建成投產

Chen Hsong Industrial Park in Fengxiang Shunde, Foshan, was officially completed and commenced production

2005

震雄集團被評為「中國機械 500 強」企業

Chen Hsong was awarded "Top 500 Machinery in China"

震雄集團被國際權威雜誌「福布斯」選為亞洲區 200 間最佳上市公司之一

Chen Hsong was elected one of the 200 Finest Companies in Asia by Forbes, an international authoritative magazine

六十五周年卓越成就
65 Years of Achievement

2004

深圳市坪山區的震雄工業園(第二期)投產

Phase II of Chen Hsong Industrial Park in Pingshan, Shenzhen commenced production

於寧波市成立震雄機械(寧波)有限公司

Established Chen Hsong Machinery (Ningbo) Co., Limited in Ningbo

iChen System™「香港工業獎：機器及設備設計優異證書」

The iChen System™ was awarded "Hong Kong Awards for Industry: Machinery and Equipment Design Certificate of Merit"

2002

圓形結構模板榮獲國家實用新型專利證書

The Circular Platen was awarded Utility Model Patent Certificate

1990

蔣震工業慈善基金

Chiang Chen Industrial Charity Foundation

蔣震博士捐出其擁有之震雄集團有限公司股份成立「蔣震工業慈善基金」

Dr. Chen Chiang donated his shares in Chen Hsong Holdings Limited to establish "Chiang Chen Industrial Charity Foundation"

80's

於佛山市順德區成立震德塑料機械廠有限公司

Established Chen De Plastics Machinery Co., Limited in Shunde, Foshan

香港大埔工業邨十七萬平方呎廠房啟用

Completion of 170,000 sq.ft. factory at Tai Po Industrial Estate in Hong Kong

於台灣成立震雄機械廠股份有限公司

Established Chen Hsong Machinery Taiwan Co., Limited in Taiwan

2000

於深圳市坪山區興建佔地五十六萬平方米的震雄工業園(第一期)工程建成交付使用

Chen Hsong's main manufacturing and R&D centers, the 560,000 sq.m. Phase I of Chen Hsong Industrial Park in Pingshan, Shenzhen, was completed

CHEN-PET 二段式瓶坯注塑配套系統榮獲「香港工業獎：廠商會機器及設備設計獎」

CHEN-PET, a two-stage preform moulding turnkey system, was awarded the "Hong Kong Awards for Industry: CMA Machinery and Equipment Design Award"

1991

震雄集團有限公司在香港聯合交易所主版上市(股份代號：00057)

Chen Hsong Holdings Limited (Stock Code: 00057) was listed on the Main Board of The Stock Exchange of Hong Kong Limited

榮獲總督工業獎生產力獎

Awarded the Governor's Award for Industry (Productivity Category)

60's - 70's

推出首台本地設計及製造的 10 安士螺絲直射注塑機並榮獲香港中華廠商聯合會「新出品」榮譽獎狀

10-ounce in-line screw-type plastic injection moulding machine, the first locally-designed and manufactured, was launched and granted the "New Product Award" by The Chinese Manufacturers' Association of Hong Kong

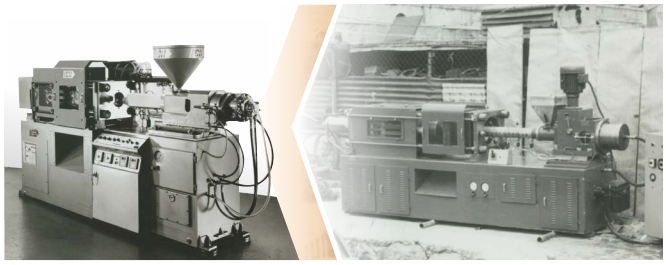

七十年代王牌「玩具王」產品

"King of Toys" in 1970's

50's

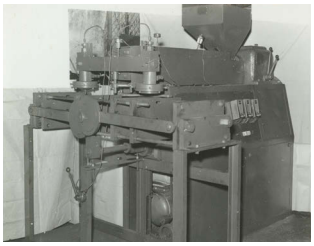

震雄於香港成立

Chen Hsong was founded in Hong Kong

首創雙色吹瓶機，受長江嘉陵江匯流後雨水仍清混共處之現象啟發。蔣震博士研創「雙色混合塑膠成型技術」，量產白、紅相間的「西瓜波」

Launched the first dual-colour blow moulding machine inspired by observations of how the turbid and pellucid waters stayed unmixed at the confluence of the Yangtze River and Jialing River – led to invention of "Watermelon Ball"

公司資料
Corporate Information

董事

執行董事

蔣麗苑女士(*主席兼集團總裁*)
鍾效良先生

獨立非執行董事

陳智思先生
許志偉先生(委任自2023年7月1日起生效)
Anish LALVANI先生
利子厚先生
陳慶光先生

審核委員會

Anish LALVANI先生(*主席*)
陳智思先生
許志偉先生(委任自2023年7月1日起生效)
利子厚先生
陳慶光先生

薪酬委員會

陳智思先生(*主席*)
Anish LALVANI先生
利子厚先生
陳慶光先生
蔣麗苑女士

提名委員會

陳慶光先生(*主席*)
陳智思先生
Anish LALVANI先生
利子厚先生

企業管治委員會

利子厚先生(*主席*)
陳智思先生
許志偉先生(委任自2023年7月1日起生效)
Anish LALVANI先生
陳慶光先生

公司秘書

陳志毅先生

授權代表

蔣麗苑女士
陳志毅先生

Directors

Executive Directors

Ms. Lai Yuen CHIANG *(Chairman and Chief Executive Officer)*
Mr. Stephen Hau Leung CHUNG

Independent Non-executive Directors

Mr. Bernard Charnwut CHAN
Mr. Harry Chi HUI (appointed with effect from 1 July 2023)
Mr. Anish LALVANI
Mr. Michael Tze Hau LEE
Mr. Johnson Chin Kwang TAN

Audit Committee

Mr. Anish LALVANI *(Chairman)*
Mr. Bernard Charnwut CHAN
Mr. Harry Chi HUI (appointed with effect from 1 July 2023)
Mr. Michael Tze Hau LEE
Mr. Johnson Chin Kwang TAN

Remuneration Committee

Mr. Bernard Charnwut CHAN *(Chairman)*
Mr. Anish LALVANI
Mr. Michael Tze Hau LEE
Mr. Johnson Chin Kwang TAN
Ms. Lai Yuen CHIANG

Nomination Committee

Mr. Johnson Chin Kwang TAN *(Chairman)*
Mr. Bernard Charnwut CHAN
Mr. Anish LALVANI
Mr. Michael Tze Hau LEE

Corporate Governance Committee

Mr. Michael Tze Hau LEE *(Chairman)*
Mr. Bernard Charnwut CHAN
Mr. Harry Chi HUI (appointed with effect from 1 July 2023)
Mr. Anish LALVANI
Mr. Johnson Chin Kwang TAN

Company Secretary

Mr. Chi Ngai CHAN

Authorized Representatives

Ms. Lai Yuen CHIANG
Mr. Chi Ngai CHAN

核數師

安永會計師事務所
註冊公眾利益實體核數師

Auditor

Ernst & Young
Registered Public Interest Entity Auditor

主要往來銀行

中國建設銀行(亞洲)股份有限公司
恒生銀行有限公司
中國工商銀行(亞洲)有限公司
香港上海滙豐銀行有限公司

Principal Bankers

China Construction Bank (Asia) Corporation Limited
Hang Seng Bank Limited
Industrial and Commercial Bank of China (Asia) Limited
The Hongkong and Shanghai Banking Corporation Limited

主要股份過戶登記處

MUFG Fund Services (Bermuda) Limited
4th Floor North
Cedar House
41 Cedar Avenue
Hamilton HM 12
Bermuda

Principal Share Registrar

MUFG Fund Services (Bermuda) Limited
4th Floor North
Cedar House
41 Cedar Avenue
Hamilton HM 12
Bermuda

股份過戶登記分處

卓佳登捷時有限公司
香港
夏慤道16號
遠東金融中心17樓

Branch Share Registrar

Tricor Tengis Limited
17/F, Far East Finance Centre
16 Harcourt Road
Hong Kong

註冊辦事處

Victoria Place
5th Floor, 31 Victoria Street
Hamilton HM 10
Bermuda

Registered Office

Victoria Place
5th Floor, 31 Victoria Street
Hamilton HM 10
Bermuda

總辦事處及主要營業地點

香港
威非路道18號
萬國寶通中心
20樓2001室

Head Office & Principal Place of Business

Unit 2001, 20th Floor
Citicorp Centre
18 Whitfield Road
Hong Kong

企業傳訊及投資者關係

公司秘書
電話：(852) 2665 3888
傳真：(852) 2664 8202
電郵：comm@chenhsong.com
網址：www.chenhsong.com

Corporate Communications & Investor Relations

Company Secretary
Tel: (852) 2665 3888
Fax: (852) 2664 8202
E-mail: comm@chenhsong.com
Website: www.chenhsong.com

股份代號

00057

Stock Code

00057

主席報告書
Chairman's Statement

業務回顧

截至二零二三年三月三十一日止的財政年度，本集團錄得營業額港幣23.13億元(二零二二年：港幣27.29億元)，較去年下降15%。而本公司權益持有人應佔溢利為港幣1.30億元(二零二二年：港幣2.13億元)，較去年下降39%。

於本財政年度內，新冠疫情對中國大陸地區仍然有一定程度的影響。上海封城嚴重影響了國內地區的物流供應鏈及產品的出口付運，加上房地產市場疲弱及中、美貿易博弈重燃等因素，中國國內生產總值(GDP)全年增幅僅為3%。這是除了疫情來襲的2020年外，中國近半個世紀以來國內生產總值第二低的增長水平。這些因素都直接影響家庭收入及消費意欲，也導致製造業活動(尤其是消費品生產)收縮。此外，由於俄烏衝突及地緣政治緊張等不穩定因素的影響下，對國內出口行業也帶來較大的衝擊。

另一方面，其他主要經濟體如英美、歐洲各國等，也因為俄烏衝突持續及自疫情爆發以來各國的量寬政策對糧食及能源等帶來價格上升的壓力，導致歐美地區普遍受到通脹飆升的不良影響，令歐美地區的消費市場持續萎縮。此外，為了應對全球通脹的影響，各地央行都在本年度啟動加息周期。這一方面影響新興市場貨幣的穩定性，對新興市場經濟發展帶來不穩定因素，而另一方面亦進一步打擊了歐美市場消費者的信心。

Business Review

For the financial year ended 31 March 2023, the Group registered a decline in turnover of 15% to HK$2,313 million (2022: HK$2,729 million). Profit attributable to equity holders dropped by 39% to HK$130 million (2022: HK$213 million).

During this financial year, COVID19 continued to exert its influence onto the Mainland China market, with the lockdown of Shanghai severely disrupting the domestic supply chain and export deliveries. Adding to that were other negative factors such as weak real estate market and rekindled Sino-US trade tensions, leading to a lacklustre GDP growth of only 3% – the second worst performance in almost half a century apart from the pandemic year of 2020. As a result, household income in China was depressed, which in turn suppressed consumption and manufacturing activities (especially for consumer products). Furthermore, geo-political tensions as well as the persistent conflict between Russia and Ukraine exerted a heavy toll on China exports.

On the other hand, other major developed economies such as the UK, the U.S. and Europe were also plagued by high inflation resulting from spiking energy and food costs due to the Russia-Ukraine conflict and loose quantitative easing policy adopted by many countries since the pandemic period. Persistently high inflation levels in turn depressed consumption levels in western economies. Adding fuel to the fire were multiple rounds of sharp interest rate hikes announced by major central banks worldwide to curb inflation, which had devastating impacts on the currencies stability and economic growth of emerging countries, and hampered consumer confidence in Europe and the U.S..

於本財政年度內，本集團因應市場環境的轉變和客戶的殷切需求，推出了建基於集團旗艦產品MK6的更新型號：MK6.6，並已推出全線系列。此外，為了進一步滿足高端客戶及針對不同行業的需要，本集團亦已推出了旗艦產品線MK6的新一代及第二代高效二板機。本集團秉承着「以客為先，創造價值」的精神，將繼續投放更多資源於新產品的研究及開發，並陸續推出更多更優質、更適合市場的更新型號，以不同的產品線滿足特定行業客戶的需要。

During this financial year, the Group launched a new product series – the MK6.6, based upon the Group's flagship MK6 line – in response to evolving market dynamics and customer needs. Furthermore, to cater for rising demands for high-end and other special application segments, the Group also introduced the next generation of the popular MK6 flagship and TP two-platen series. As the Group's motto puts it: "Customers Come First and Always Create Value" the Group shall continue to allocate more resources towards research and development of new products in the future, with a focus on new machine models and variations that best fit customers' needs and uniquely address the individual demands of specific application segments.

未來展望

在俄烏衝突持續、中美貿易博弈、地緣政治緊張及國內內捲情況嚴重等不明朗因素的影響下，來年國內及環球市場仍然存在較多不確定性。本集團將繼續嚴守謹慎理財原則，加強現金流及應收賬款管理，並進一步優化供應鏈管理和控制成本，務求能迅速應對任何市場變化。同時，本集團將投放更多資源於加強建設國內外的銷售及客戶服務網絡和研發團隊，盡量抵銷以上不利因素所帶來的影響及為本集團注入新的動力。

Future Prospects

For coming financial year there will be uncertainties abound, both domestically in Mainland China as well as globally. These uncertainties arose from multiple factors from the persistent conflict between Russia and Ukraine to Sino-US trade tensions, escalating geo-political turmoil and struggling economic conditions in China. The Group has always implemented prudent financial management principles and will redouble its efforts to enhance cash flow and account receivables management, as well as further optimize supply chain management and cost control measures, so as to enable the Group to rapidly adapt to different market changes. At the same time, the Group, endeavouring to reduce the negative impacts from the various factors mentioned above, seeks to further vitalize and activate its existing structure by allocating more resources towards expanding and strengthening its research and development team, as well as its sales and distribution networks for both China and global market.

總括來說，未來的一年將會是充滿挑戰和困難的一年，但本集團將會抱着審慎的態度，繼續盡全力研發新產品及開拓新市場，以更全面的產品線滿足客戶的需求，並堅持以「誠實進取、勇於擔當」的經營信念面對挑戰。此外，新能源汽車行業在國內仍然是一枝獨秀，本集團將藉着與「比亞迪」的合作經驗，繼續開發新能源汽車市場，為國內的環境保護作出一份貢獻。

In a nutshell, the Group believes that the upcoming financial year will be one packed full of challenges and difficulties. Because of this, the Group shall commit to its core values of "Be Honest, Be Aggressive and Dare to Embrace Responsibility," and adopt a more conservative and prudent management approach, but at the same time continue to aggressively invest in developing new products and exploring new markets. The Group believes that new product models specifically tailored to customer needs will help open up new opportunities. Besides, the EV (electric vehicles) market has been the biggest winner in China, the Group will further explore this market by leveraging on the experience gained in the cooperation with BYD – the leading EV supplier in the world and contribute to the environmental sustainability in Mainland China.

今年是本集團成立六十五周年慶典，為此本集團已舉行一連串的市場推廣及客戶親密活動，以回饋多年來客戶對本集團的支持。而在這個充滿挑戰的年頭，我們更不忘眾股東對本集團多年來的鼎力支持，在秉承一貫股息政策之基礎上，致力提升股東回報，以表達對股東們的答謝。

As the year 2023 marks the Group's 65th anniversary, the Group has planned a series of promotional and marketing events for the occasion as an appreciation for the Group's customers and their support throughout the decades. In this challenging year, the Group is even more grateful towards the unwavering support of our shareholders over the years and hence, on the basis of the Group's established dividend policy, strives to enhance shareholders' returns to express our heartfelt gratitude.

致謝

本人謹代表董事局，對多年來長期支持震雄集團的所有股東、客戶、供應商、業務夥伴、往來銀行、管理層及忠誠勤奮的員工所作出的貢獻，誠意致謝！

Gratitude

On behalf of the Board of Directors, I give my heartfelt gratitude to all shareholders, customers, suppliers, business partners, and bankers of the Group for their long-term support, and to our loyal and industrious management team and employees for their continuous contributions over the years.

蔣麗苑
主席兼集團總裁

香港，二零二三年六月二十六日

Lai Yuen CHIANG
Chairman and Chief Executive Officer

Hong Kong, 26 June 2023

管理層之論述及分析
Management's Discussion & Analysis

業務表現

截至二零二三年三月三十一日止的財政年度，本集團錄得營業額港幣23.13億元(二零二二年：港幣27.29億元)，較去年下降15%，而權益持有人應佔溢利下跌39%至港幣1.30億元(二零二二年：港幣2.13億元)；每股基本盈利為港幣20.7仙(二零二二年：港幣33.8仙)。董事局建議本財政年度派發末期股息每股港幣7.3仙(二零二二年：港幣11.6仙)。

二零二二年可以說是「全球通脹年」。首先，由於俄羅斯和烏克蘭的衝突持續並呈膠著狀態，不斷虛耗及破壞資源，首當其衝的歐洲市場出現了難民、糧食不足及能源短缺等一連串的危機，使經濟大受打擊。由於俄羅斯是全球能源出口大國，烏克蘭也是主要全球糧食出口國，雙方的衝突使全球能源及糧食價格一度飆升，引發全球通脹。此外，中國大陸新冠疫情的持續衝擊以及中、美貿易博弈等世界秩序的動盪形勢，也同時起了推波助瀾的作用。

於本財政年度，全球主要消費國的經濟都被通脹擾動。自新冠疫情爆發以來，各國相繼推出大規模貨幣擴張政策，造成了強大的需求拉動效應。治理通脹已成為了環球中央銀行現時最迫切課題，惟各國的應對措施又繼而引發新一輪的衝擊。譬如由於美國經濟過熱、通脹高踞不下，使聯邦儲備局採取激烈的「縮表」政策，啟動加息周期，在二零二二年內連續七次加息，把利率從0%大幅提升至4.5%。環球大部分中央銀行也緊隨加息步伐：英倫銀行加息七次，歐洲中央銀行加息四次，一些通脹更為嚴重的發展中國家的加息次數和幅度則更大。

Business Performance

For the financial year ended 31 March 2023, the Group's turnover declined by 15% to HK$2,313 million (2022: HK$2,729 million). Profit attributable to equity holders declined by 39% to HK$130 million (2022: HK$213 million) while basic earnings per share amounted to HK20.7 cents (2022: HK33.8 cents). The Board recommended the payment of a final dividend of HK7.3 cents (2022: HK11.6 cents) per share for this financial year.

The year of 2022 can be described concisely as a "Global Inflation Year". The stalemate of Russia-Ukraine conflict continued to consume massive resources and destroy infrastructure, with Europe economies taking a frontal impact in the form of refugee, food and energy shortages crises. With Russia being a prominent global energy exporter and Ukraine a major global grain exporter, the conflict caused worldwide shortages and hikes in worldwide energy and food prices – leading to Global Inflation. Making matters worse, Mainland China at the same time was stuck in a struggle with continuous COVID19 outbreaks as well as rising geo-political tensions such as the Sino-US trade disputes.

During this financial year, loose quantitative easing policy – common tactic to counter the COVID pandemic – led to overheating demand spikes, as high inflation persistently plagued major consumer economies across the globe. In fact, combating inflation became the most urgent task of central banks worldwide, but the measures were sometimes no less disruptive than inflation itself. For example, to deal with an overheating economy and rampant inflation, the U.S. Federal Reserve started an aggressive quantitative tightening and rate hike process, with seven consecutive rate hikes in 2022 alone that took the Federal funds rate from 0% to 4.5% – a massive increase. Most central banks around the world followed its footsteps, with the Bank of England hiking interest rates similarly for seven times, and the European Central Bank for four times, and even more drastic hikes in many inflation-plagued developing countries.

高通脹以及頻繁的加息活動使全球絕大部分國家的經濟增速出現大幅度回落。即使是近數十年的世界經濟增長火車頭中國大陸，二零二二年的國內生產總值(GDP)增長亦只有3%，是撇除新冠疫情的影響後，近半世紀以來的第二低水平。而國際貨幣基金(IMF)更多次調低二零二二年的世界經濟增速預期，相比二零二一年大幅下降2.8%，並對二零二三年的環球經濟展望表示負面。各種不利因素更在二零二二年的最後一季(即本集團財政年度的第三季)達到頂峰。

High inflation and aggressive interest rate hikes inevitably caused economic activities to subside in most countries across the globe. Even Mainland China – the growth engine of the world economy for the past few decades – was taking its toll, with Gross Domestic Product (GDP) growth in 2022 declined to 3%, the second lowest level within half a century (disregarding the pandemic year). As the same time, the International Monetary Fund (IMF) continued to downgrade the 2022 world economic growth forecasts by 2.8%, and gave a negative outlook on the global economy for 2023. Negative sentiments converged to a peak during the fourth quarter of 2022, or the third quarter of the Group's financial year.

由於本集團的核心客戶群(尤其在中國大陸及台灣等地)主要依賴出口業務，故全球通脹所引致的消費疲弱對本集團的業績構成沉重的打擊。

As the Group's core customers rely primarily on export business, especially in Mainland China and Taiwan, thus the Group's performance was heavily impacted by this inflation-induced global consumption weakness.

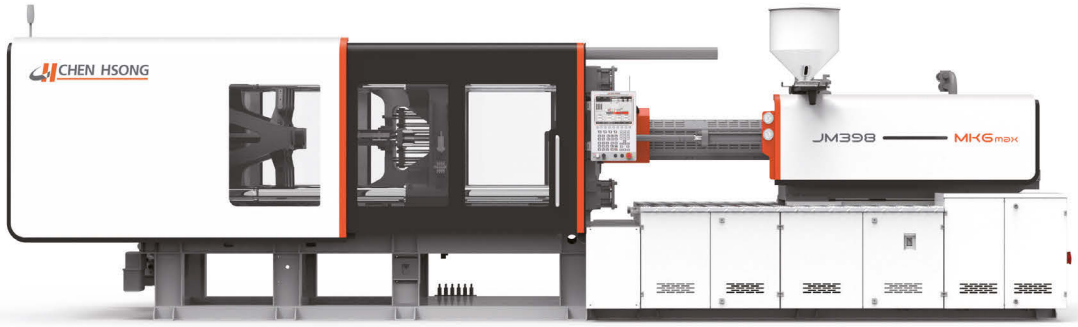

捷霸MK6「max」伺服驅動注塑機
JETMASTER MK6 "max" Servo Drive Injection Moulding Machine

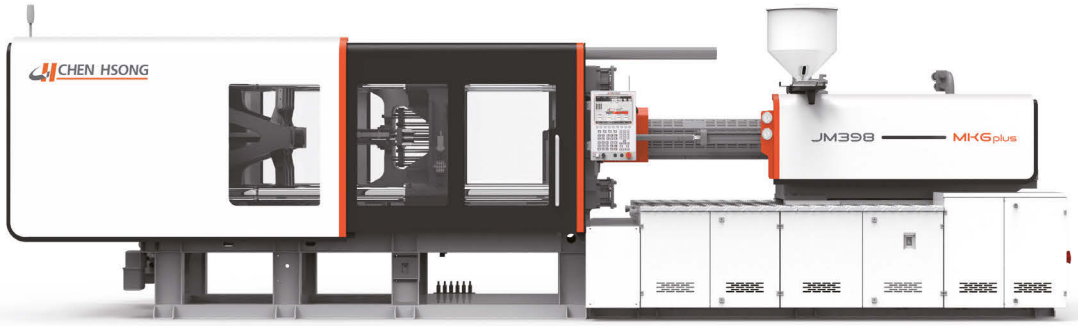

捷霸MK6「plus」伺服驅動注塑機
JETMASTER MK6 "plus" Servo Drive Injection Moulding Machine

市場分析

截至二零二三年三月三十一日止的財政年度，按客戶地域劃分的營業額分析如下：

Market Analysis

Breakdown of turnover, based on the location of customers, for the financial year ended 31 March 2023 is as follows:

客戶地域	Customer Location	**2023** *(港幣百萬元)* ***(HK$ million)***	2022 *(港幣百萬元)* *(HK$ million)*	變動 Change
中國大陸及香港	Mainland China and Hong Kong	**1,671**	1,987	-16%
台灣	Taiwan	**63**	132	-52%
其他海外國家	Other overseas countries	**579**	610	-5%
		2,313	2,729	-15%

本財政年度的中國大陸經濟受到多方面因素的衝擊，使消費水平受壓，工業增速降至低於疫情前的水平。隨著全球政治大環境的不確定性進一步惡化，再加上高通脹及加息周期等不利因素，中國大陸的產品出口受到嚴重影響。本財政度的第三季(即二零二二年最後一季)外貿進出口同比增速已由正數轉為負數，顯示出口活動乏力，而主要的原因是國外的訂單急劇萎縮，導致製造業投資增速出現了大幅下滑。中國大陸的GDP增速在同期間降至3%以下的水平，而反映製造業景氣的採購經理指數(PMI)亦跌至47的收縮區間，均遠低於預期。雖然PMI數據在本財政年度第四季(即二零二三年第一季)重回擴張區，但在四月份開始卻逆預期再次掉落收縮區間，顯示製造業並未出現明確的復甦。本集團很多出口客戶都表示歐、美發達國家經銷商的庫存嚴重積壓，消費力度弱，個別庫存甚至積壓超過一年的銷量，故本年度的補貨訂單遲遲不下，亦直接壓止了客戶添置新機器的需求。

During this financial year, with the economy in Mainland China consistently impacted by multiple negative factors, growth in industrial output dropped below pre-COVID levels. As geo-political tensions escalated, high inflation and rapid rate hikes caused a massive shrinkage of export orders, which resulted in a sharp drop in Mainland China's import and export activities, registering a negative growth in the third quarter of this financial year (i.e. the last quarter of 2022). Stalling exports in turn led to a severe reduction in capital investments for manufacturing equipment. During 2022, Mainland China GDP growth declined to below 3%, while the Purchasing Manager's Index (PMI) dropped to 47 by the end of the year, both far below expectation. Although PMI figures rebounded during the fourth quarter of this financial year (i.e. the first quarter of 2023), it fell back into below-the-50 threshold starting from April, indicating a recovery in the manufacturing sector was far from assured. Many export customers of the Group indicated that unsold inventories were heavy in western consuming countries, such as Europe and the U.S., due to inflation-induced weak consumption. In certain cases, unsold inventories worth more than one full year's sales turnover. Consequently, many customers of the Group delayed their plans to purchase new machines as their customers' restocking orders did not happen.

而在內部需求方面，房地產低迷影響了一連串的上游行業，包括家電以及建材等板塊，而汽車市場除了新能源汽車一枝獨秀外(如本集團與新能源汽車龍頭品牌「比亞迪」合作，提供接近人民幣5億元的高端注塑機，協助比亞迪迅速擴充產能)，傳統的燃油車的需求大幅萎縮。這些因素均使中國大陸的內部消費亦趨於疲軟，不利製造業增加產能投資。故此，本集團在中國大陸市場的業績錄得16%的跌幅至港幣16.71億元(二零二二年：港幣19.87億元)。

Domestically, the depressed real estate market in Mainland China also suppressed the whole chain of upstream industries such as electric appliances and construction materials sectors. Although there was a renaissance in the growth of electric vehicles (EV's) – and the Group cooperated with EV market leader BYD to supply more than RMB500 million worth of high-end injection moulding machines to support BYD's massive capacity growth plans – traditional gas-powered automotive encountered a considerable decline in market share. All the factors above contributed to the weakening of domestic consumption in Mainland China, which in turn suppressed investments in new capital equipment. Consequently, the Group's turnover in Mainland China declined by 16% to HK$1,671 million (2022: HK$1,987 million).

本財政年度內，本集團在台灣市場的跌幅顯著，主要是受到出口訂單疲弱的影響。台灣客戶主要出口歐、美等發達國家，但歐洲因為俄烏衝突的原因，經濟陷入衰退，消費乏力，而美國則面對通脹高企、利率飆升等不利因素，對出口業務構成巨大的衝擊。故此，本集團在台灣市場的營業額下降52%至港幣6,300萬元(二零二二年：港幣1.32億元)。

During this financial year, the Group registered a significant decline in turnover in Taiwan, primarily due to weak export orders. As Taiwanese customers mainly focus on export to western developed countries such as Europe and U.S., and European economies took a nose dive due to the Russia-Ukraine conflict and rampant inflation and rate hikes in the U.S., export activities in Taiwan were heavily impacted. The Group therefore registered a decline of 52% in Taiwan to HK$63 million (2022: HK$132 million).

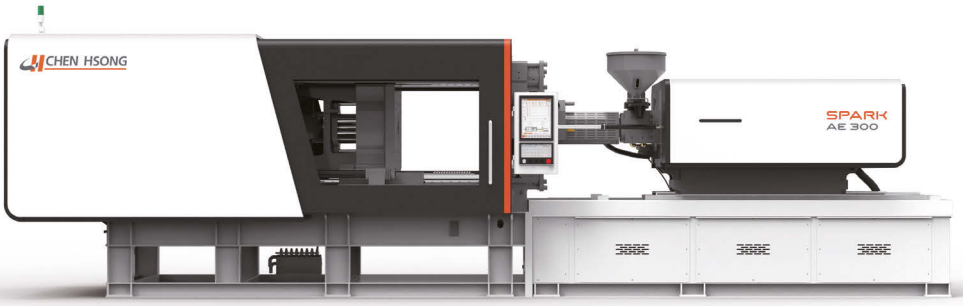

SPARK AE系列全電動注塑機
SPARK AE Series All-Electric Injection Moulding Machine

在國際市場方面，由於歐、美等發達國家的經濟發展勢頭均遇到不同程度的障礙，直接打擊了本集團的國際業務。在二零二二年，除了中國的消費物價相對穩定外，在俄烏衝突、中、美貿易博奕和新冠疫情的反覆拖累下，全球大部分國家的通脹均顯著飆升：美國消費物價指數(CPI)增長8.1%，為四十年來最高；歐元區CPI增長8.3%，為一九九二年以來最高；所有發達經濟體的平均通脹為7.2%，即使是日本的十月份CPI也上升至3.7%。

而很多發展中國家的通脹更尤其失控：非洲、拉丁美洲以及中東地區的平均CPI增長高達14%。嚴重的通脹迫使美國聯邦儲備局急速啟動了加息周期，而世界各國的中央銀行也被迫跟隨，導致新興市場的貨幣貶值以及大幅度的金融動盪。儘管如此，本集團在個別市場的發展，猶幸尚能帶來一些鼓舞。其中印度、中東、非洲等市場，本集團於本財政年度內逆勢錄得不錯的業績增長，惟無法彌補歐洲及美國等發達地區經濟乏弱所帶來的巨大衝擊，全年的國際市場營業額平均錄得5%的跌幅至港幣5.79億元(二零二二年：港幣6.10億元)。

As for the international market, the Group also faced significant headwinds as European and U.S. economies went into stalling. During the entire year of 2022, with the exception of Mainland China whose consumer prices had remained relatively stable, most countries in the world experienced stubbornly-high inflation resulting from the conflict between Russia and Ukraine, rekindled Sino-US trade disputes and resurgent COVID outbreaks. For instance, Consumer Price Index (CPI) in the U.S. spiked by 8.1%, a forty-year high, while CPI in the Eurozone rose by 8.3%, highest since 1992. Average inflation for all developed economies reached 7.2%, an extremely high level. Even Japan's CPI growth climbed to 3.7% in October.

Inflation in many developing countries went straight out of control – average CPI growth, for instance, of Africa, Latin America and Middle East to reach 14%. Runaway inflation forced the Federal Reserve of the U.S. to undergo an aggressive and very rapid rate hike program in response, with major central banks around the world following, wreaking havoc on emerging markets currencies and financial systems. Despite these challenges, however, the Group still managed to achieve encouraging business growth in certain markets such as in India, Middle East and Africa, but unfortunately this could not fully offset the significant downsides arising from the weaknesses in the Europe and the U.S. markets. As a result, the Group's international turnover recorded an average 5% decline to HK$579 million (2022: HK$610 million).

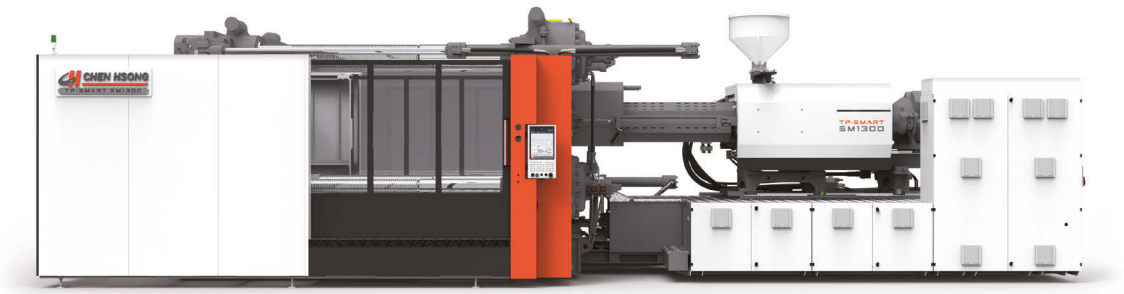

超霸TP-SMART大型二板式伺服驅動注塑機
SUPERMASTER TP-SMART Two-Platen Servo Drive Injection Moulding Machine

新技術與新產品開發

於本財政年度內，本集團推出了MK6.6/A「Artisan」「匠心版」型號，廣受市場的好評及客戶的青睞。而在二零二二年十二月份，本集團乘勝追擊，舉行了一次巨型的網上新產品發布會，同時發布了六個新產品系列，並為3個更高規格、快將完成研發的新產品系列進行預告，獲得遠超行業平均的點擊率、點讚數及觀看率，為客戶帶來驚喜，令人眼前一亮，傳為一時佳話。是次網上新產品發布會中，本集團推出了以下行業及應用專業針對性的全新產品線及機型：

一、 專門針對要求高性價比(如家用品)的MK6.6/A「Artisan」「匠心版」系列；

二、 專門針對有精度要求(如家電)的MK6.6/B「Brilliance」「卓越版」系列；

三、 專門針對有高規格要求(如玩具)的MK6.6/C「Competence」「精工版」系列；

四、 專門針對高端多物料製品生產的全新DM III多物料系列；

五、 專門針對大型高精密製品市場(如導光條)的SPARK 300及360型號；

六、 震雄Mega Cloud雲端IOT系統；

七、 專門針對高端、極高要求(如積木玩具、電子零件)的MK6「PRO」全新旗艦系列(預告)；

八、 專門針對有更高射膠控制精度要求的MK6「plus」系列(預告)；及

九、 專門針對有更高規格要求的MK6「max」系列(預告)。

Development of New Technologies and New Products

During this financial year, the Group launched its new MK6.6/A "Artisan" series with great market reception in general. Therefore, in December 2022, the Group continued the success with a massive online new-products launch event, announcing six new product models as well as previews of three new high-end, soon-to-be-launched product lines. This online event achieved click rates, likes and views far exceeding the industry standard, and brought a fresh breath of air in the traditional capital equipment industry to delight the customers. During the online launch event, the following product lines, targeting industry and application-specific segments, were announced:

1. MK6.6/A "Artisan" for applications demanding high price-performance, such as houseware and household goods;

2. MK6.6/B "Brilliance" for applications demanding precision, such as electric appliances;

3. MK6.6/C "Competence" for applications demanding high configuration, such as toys;

4. The DM III third-generation multi-material platform for products using multiple plastic resins;

5. Large-tonnage all-electric models the SPARK 300 and 360 for large-sized products demanding high-precision, such as light guide industry;

6. The Chen Hsong proprietary Mega Cloud IOT online platform;

7. Preview of the MK6 "PRO" series, the upgraded Group flagship series for very demanding applications, such as assembly toy bricks and electronic parts;

8. Preview of the MK6 "plus" series for applications demanding very high precision on injection control; and

9. Preview of the MK6 "max" series for applications demanding ample machine configuration.

生產產能與成本控制

本集團於本財政年度內已完成主要生產基地的老舊改造、設備自動化升級等專案，並進一步擴大了產能。未來，本集團將規劃自動化組裝流水線、柔性加工生產線等，持續提升各生產基地的自動化與智慧化水平，提高生產運營管理的效率。

本集團亦不斷完善品質保證體系，深化TQM（全員品質管理）活動，提高員工的品質意識及作業標準化程度。在目前國內與國際市場均呈現需求不足、競爭激烈的環境下，本集團將積極開展生產運營VI（價值改進）成本控制活動，致力推動全面生產運營降本，強化產品的市場競爭力。

由於未來市場環境發展極之不明朗，需求存在很多不確定性，本集團將持續強化供應鏈管理，進一步舒緩供應鏈的瓶頸環節，並不斷提升供應柔性，協助供應商改善品質保證體系和控制成本，務求能迅速應對各種市場變化。

Product Capacity and Cost Control

During this financial year, the Group has completed the overhaul of its major manufacturing facilities, including upgrades to old equipment and adding new automation systems, resulting in increased capacity. The Group has plans to introduce automatic assembly lines and flexible manufacturing systems in order to raise the general level of automation, intelligent management and operating efficiency in all the Group's production facilities.

The Group also strived to perfect its quality assurance and, through an in-depth Total Quality Management (TQM) program, seek to raise quality consciousness and standard-driven operating procedures among all production staff. An expanded and more aggressive Value Improvement (VI) program is also underway in order to further reduce procurement costs, as well as raise operational efficiency, for higher competitiveness in the current weak market demand condition in Mainland China and international markets.

As future market conditions remain extremely uncertain and unpredictable, the Group shall continue to strengthen its supply chain management, alleviate supply bottlenecks, enhance supply flexibility, as well as assist suppliers to upgrade their quality assurance systems and cost control measures, in order to be able to respond rapidly to any market change.

財務回顧

為優化資源布局、達致資源投放最佳化，本集團已於本財政年度將大埔工業邨之廠房及用地歸還予香港科技園公司。是次廠房及用地的歸還安排，為本集團於本財政年度內帶來一次性港幣3,100萬元的出售收益。

Financial Review

During this financial year, the Group surrendered the lease for the Tai Po plant to the Hong Kong Science and Technology Parks Corporation for the sake of better allocation of resource. As a result, the Group recorded a one-off disposal gain of HK$31 million during the year.

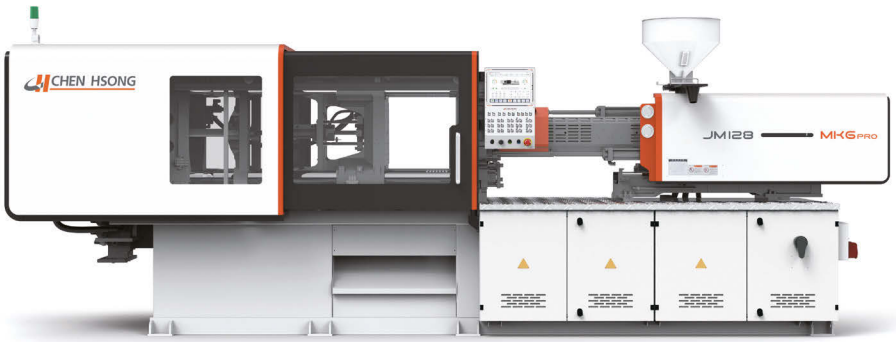

捷霸MK6「PRO」伺服驅動注塑機
JETMASTER MK6 "PRO" Servo Drive Injection Moulding Machine

流動資金及財務狀況

於二零二三年三月三十一日，本集團的流動資產淨值為港幣19.90億元(二零二二年：港幣20.42億元)，較去年減少3%。現金及銀行結存(包括有抵押存款)為港幣6.71億元(二零二二年：港幣7.00億元)，較去年減少港幣2,900萬元。於二零二三年三月三十一日，本集團並無銀行貸款，較去年減少港幣2,200萬元。於二零二二年三月三十一日，銀行貸款為港幣2,200萬元，該銀行貸款為短期浮息貸款，用作一般營運資金。本集團淨現金結餘為港幣6.71億元(二零二二年：港幣6.78億元)，較去年減少港幣700萬元。

本集團的負債比率乃按總借貸扣除現金及銀行結存除以總資產計算。於二零二三年三月三十一日，本集團持有淨現金結餘。因此，並無呈報負債比率。

本集團會繼續維持一貫穩健的財務管理政策，儲備充足的流動資金，以應付本集團對各項資本投資及營運資金的需求。

資產抵押

於二零二三年三月三十一日，在本集團之若干附屬公司所持有之銀行存款中，為數港幣2,600萬元(二零二二年：港幣2,700萬元)已作抵押，其中港幣300萬元(二零二二年：港幣300萬元)用作擔保於中國大陸之銀行給予客戶作購買本集團產品的銀行貸款；及港幣2,300萬元(二零二二年：港幣2,400萬元)用作擔保發出給予供應商的銀行承兑匯票，該等匯票記入應付貿易及票據賬款內。此外，本集團之一間附屬公司所持有之應收票據賬款中，為數港幣9,400萬元(二零二二年：港幣9,800萬元)已作抵押，用作擔保發出給予供應商的銀行承兑匯票，該等匯票記入應付貿易及票據賬款內。

Liquidity and Financial Conditions

As at 31 March 2023, the Group had net current assets of HK$1,990 million (2022: HK$2,042 million), which represented a 3% decrease over last year. Cash and bank balances (including pledged deposits) amounted to HK$671 million (2022: HK$700 million), representing a decrease of HK$29 million as compared to last year. As at 31 March 2023, the Group had no bank borrowings, decreased by HK$22 million as compared to last year. As at 31 March 2022, the bank borrowings were HK$22 million, which were short term loans with floating interest rates for general working capital purposes. The Group recorded a net cash position of HK$671 million (2022: HK$678 million), representing a decrease of HK$7 million as compared to last year.

The gearing ratio of the Group is measured as total borrowings net of cash and bank balances divided by total assets. The Group had a net cash position as at 31 March 2023. As a result, no gearing ratio was presented.

It is the policy of the Group to adopt a consistently prudent financial management strategy, sufficient liquidity is maintained to meet the funding requirements of the Group's capital investments and operations.

Charge on Assets

As at 31 March 2023, bank deposits of certain subsidiaries of the Group in the amount of HK$26 million (2022: HK$27 million) were pledged, including HK$3 million (2022: HK$3 million) for securing a bank loan granted by a bank in Mainland China to a customer to purchase the Group's products, and HK$23 million (2022: HK$24 million) for securing the issuance of bank acceptance notes, recorded in the trade and bills payables, to suppliers. In addition, bills receivable of a subsidiary of the Group in the amount of HK$94 million (2022: HK$98 million) was pledged for securing the issuance of bank acceptance notes, included in the trade and bills payables, to suppliers.

資本承擔

於二零二三年三月三十一日，本集團主要於中國大陸之生產設施更新改善工程及購買之生產設備之資本承擔為港幣2,600萬元(二零二二年：港幣1,300萬元)，資金會由本集團內部資源提供。

Capital Commitments

As at 31 March 2023, the Group had capital commitments of HK$26 million (2022: HK$13 million), mainly in respect of the upgrading of industrial facilities and the purchases of production equipment in Mainland China which are to be funded by internal resources of the Group.

資金及外幣風險管理

本集團在資金管理方面，採取穩健的理財策略，資金主要以港元、人民幣、新台幣、美元及歐元持有，並一般以短期或中期存款存放於銀行，作為本集團的流動資金。

於二零二三年三月三十一日，本集團並無日圓借貸。於二零二二年三月三十一日，本集團有相等於港幣2,200萬元的日圓借貸，用作支付供應商日圓貨款。本集團亦不時對若干波動較大的外幣風險作出評估，以合適之方法減低有關的風險。

本集團於中國大陸有重大投資，並知悉任何人民幣匯率波動將對本集團的淨溢利有所影響。但由於本集團之交易多以人民幣結算，故該匯兑差額對本集團的實際營運及現金流不構成直接影響。

Treasury and Foreign Exchange Risk Management

The Group adopts a prudent approach in managing its funding. Funds, primarily denominated in the Hong Kong Dollar, the Renminbi, the New Taiwanese Dollar, the U.S. Dollar and the Euro, are generally placed with banks as short or medium term deposits for working capital of the Group.

As at 31 March 2023, the Group had no borrowings in Japanese Yen. As at 31 March 2022, the Group had borrowings in Japanese yen equivalent to HK$22 million for payments to suppliers in Japanese yen. The Group, from time to time, assesses the risk exposure on certain volatile foreign currencies and manages it in appropriate manner to minimize the risk.

The Group has substantial investments in Mainland China and is aware that any fluctuation of the Renminbi would have an impact on the net profits of the Group. However, since most of the transactions of the Group are conducted with the Renminbi, the exchange differences have no direct impact on the Group's actual operations and cash flows.

或然負債

於二零二三年三月三十一日，本集團就客戶用於購買本集團產品的銀行貸款所提供給銀行的擔保為港幣300萬元(二零二二年：港幣400萬元)。於二零二三年三月三十一日，本集團並無為客戶提供給銀行的履約擔保。於二零二二年三月三十一日，本集團為客戶提供給銀行的履約擔保為港幣20萬元。

Contingent Liabilities

As at 31 March 2023, the Group provided guarantee to a bank amounted to HK$3 million (2022: HK$4 million) for a bank loan granted to a customer to purchase the Group's products. As at 31 March 2023, the Group provided no performance guarantee to a bank for a customer. As at 31 March 2022, the Group provided performance guarantee to a bank amounted to HK$0.2 million for a customer.

客戶與供應商關係

本集團秉承一向的宗旨「客人所要的，就是我們要做的」，在最大的可能下時刻以客戶的利益作為目標，為所有客戶提供優良的產品、以及適當、及時的售前、售後服務。同樣地，本集團嚴格選擇優質的供應商，並視供應商為策略性配套夥伴，致力保持良好的關係以及互動、互信的溝通原則，務求使供應商成為本集團的供應鏈中緊扣的環節。

無論是客戶或供應商，本集團的最終目的是互惠互利，共創「雙贏」。

Relationship with Customers and Suppliers

It has long been the Group's motto to "Our Customer's Need is Our Command" and to the maximum extent possible the Group puts the interests and needs of our customers as its primary reason of being. This includes providing the Group's customers with the best designed products, and timely and appropriate pre/after-sales services. Similarly, the Group strictly selects high-quality suppliers and views its suppliers not as mere vendors but as strategic partners and important links in its supply chain. It is the Group's procurement policy to maintain good relationship and communications with suppliers based on the principle of mutual trust.

In the end, the ultimate goal of the Group with regards to customers and suppliers is "Win-Win".

環境政策及表現

本集團專注加強環境保護，將營運對環境所產生的影響減至最低，並遵守適用的環保法規。本集團已實施有效的環境保護政策(「該政策」)，致力促進本集團對環境保護的進程。

根據該政策，本集團專注推行潔淨生產和在營運上最有效地善用資源及減低浪費和排放。本集團通過積極更新運作和生產方法以鼓勵和提升資源再利用，採用對環境友善的原材料和持續檢討生產營運，以確保生產流程之成效和效益。

本集團爭取供應商和顧客參與及支持環境保護，並且實施培訓計劃以提升員工對環境保護的認知。透過設立實際可行的主要表現目標，本集團持續評估營運對當地環境的影響，並研究和探索創新綠色可能替代品以支持綠色環境。

Environmental Policies and Performance

The Group is committed to enhancing environmental protection, minimizing the impact of its activities on the environment, and complying with applicable environmental laws. The Group has implemented effective Environmental Protection Policy (the "Policy") that enables the Group to making progress in environmental protection.

Under the Policy, the Group focuses on promoting clean production, and strives to making the most efficient use of resources in its operations, and minimizing waste and emission. The Group achieves this aim through actively re-designing its activities and production methods that encourage and promote recycling of resources, using environmentally-friendly raw materials and reviewing production operations constantly to ensure that the processes are effective and efficient.

The Group enlists its support by engaging and promoting environmental protection among its suppliers and customers and implementing training programmes that raise environmental protection awareness among its employees. Through realistic and achievable key performance targets, the Group measures the impact of its activities on the local environment continuously, and conducts research and explores potential innovative green alternatives that support a green environment.

遵守法律及法規

本集團之業務主要由本公司於中國大陸、香港及台灣之附屬公司營運，而本公司於香港聯合交易所有限公司上市。本集團因此須遵守中國大陸、香港、台灣及本公司及其附屬公司於各自註冊成立地之相關法律及法規。

於本年度內及直至本年報日期，董事局並不知悉存在對本集團業務及營運造成重大影響之適用法律及法規之任何不合規情況。

Compliance with Laws and Regulations

The Group's operations are mainly carried out by the Company's subsidiaries in Mainland China, Hong Kong and Taiwan, while the Company itself is listed on The Stock Exchange of Hong Kong Limited. The Group accordingly shall comply with relevant laws and regulations in Mainland China, Hong Kong, Taiwan and the respective places of incorporation of the Company and its subsidiaries.

During the year and up to the date of this annual report, the Board was unaware of any non-compliance with the relevant laws and regulations that have a significant impact on the business and operations of the Group.

人力資源

於二零二三年三月三十一日，本集團的全職僱員總數約為2,300名(二零二二年：2,300名)。本集團為僱員提供完善之薪酬及福利條件，薪酬維持於具競爭力水平，而僱員之回報取決於其個人表現及本集團業績表現。

於人才培訓方面，本集團透過定期為僱員提供教育、專業培訓及生活輔導等活動，不斷提升員工質素、專業知識水平及團隊精神。

Human Resources

As at 31 March 2023, the Group had approximately 2,300 (2022: 2,300) full-time employees. The Group offers good remuneration and welfare packages to its employees and maintains market-competitive pay levels. Employees are rewarded based on individual as well as the financial performance of the Group.

The Group conducted regular programmes, including comprehensive educational and professional training, and social counselling activities, to its employees to enhance staff quality, standards of professional knowledge and teamwork spirit.

來年展望

展望來年的發展及運營，本集團實不敢樂觀。中國大陸的二零二三年GDP增長目標仍然希望「保五」，但眾多經濟學家均認為難度和挑戰非常艱巨，原因是全球的消費水平仍然疲弱，而通脹雖然稍微有受控跡象，但高企的利率使很多企業面對沉重的資金壓力，引致全球的企業破產個案急劇上升。世界銀行多次下調二零二三年的全球經濟增長預測，最終調至2.1%的偏低水平，顯示嚴峻的金融環境以及消費品需求顯著下滑很大機會會把大部分發展中國家推向嚴重衰退。

Prospects for the Coming Year

The Group is not optimistic towards the development and operation for the upcoming financial year based on a number of observations. For instance, Mainland China's GDP growth target is set to be not lower than 5%, a target that most economists believe to be extremely difficult and challenging due to the currently weak global consumption level. Although inflation seems finally to be abiding, high interest rate levels are causing heavy financial burden on enterprises, leading to rapid rises of corporate bankruptcies worldwide. The World Bank repeatedly downgraded 2023 global economy growth forecasts, finally to the low level of 2.1%, and indicated that the current acute financial environment and material consumption decline will highly likely push most developing countries into outright recession.

除此以外，其他不利因素亦持續影響市場環境，如俄羅斯與烏克蘭的衝突短期內未見有平息的跡象，以及中、美的國際政治角力日趨加劇等，都嚴重打擊市場信心。本集團認為，未來的財政年度將會面對非常嚴峻的挑戰，但本集團仍會堅持投放資源於建設及強化銷售與服務網絡，目的是進一步拉近與客戶端的距離，了解並配合客戶的需要，「急客戶所急」，讓震雄成為廣大客戶於逆境下的最佳業務夥伴。尤其是策略性的海外市場，本集團準備增建一系列在地服務中心，以提供更及時、更優質、更貼身的售前、售後服務，為未來的市場復甦作出部署。

Other factors also contribute to hamper market confidence, such as the persistent conflict between Russia and Ukraine that shows no sign of subsiding and escalating Sino-US political tension. Although the Group sees tremendous challenges ahead in the coming financial year, investments into building and strengthening the Group's sales and service network will not be deterred, because the Group believes that can help getting closer to customers, understanding and addressing the customers' urgent needs better, and hence enabling Chen Hsong to become a reliable partner for customers in adverse times. This is particularly important in the strategic international markets, where the Group plans to build a series of new domestic service centres to provide global customers with timelier, higher quality and much tailored technical, pre-sales and after-sales services. These new service centres will be well poised to gain from an eventual market rebound in the future.

在產品開發方面，本集團亦將持續、堅持不懈地加強科研投資力度，推出具有針對性和專用性的新產品及新型號，以回應市場用戶的迫切需要。

The Group will also continue to invest into research and development and the introduction of new, application-specific technologies and product lines, in order to address the urgent needs of customers.

隨著本集團啟用經重整及完善的管理及資訊架構，本集團預料可獲得效益提升，減輕惡劣市場環境帶來的負面影響。二零二三年是本集團成立六十五周年，本集團已計劃舉行一連串的市場推廣活動，回饋廣大客戶一直以來的支持。本集團將繼續竭盡全力，於逆境中增強競爭力，搶佔市場份額。

As the Group's reorganization and revitalization of its management and IT infrastructure come to completion, enhanced operating efficiency can be expected to offset the negative impacts of poor market conditions. 2023 is the Group's 65th anniversary. The Group has planned a series of promotional and celebratory events in appreciation of the continuous support of the market and customers throughout the decades. Needless to say, the Group will do its utmost to improve competitiveness in the current adverse market environment, and capture as much market share as it can.

董事之個人資料
Biographical Details of Directors

執行董事

蔣麗苑 *BA, JP*

（別名蔣麗婉）

主席兼集團總裁

蔣女士於一九八八年加入本集團，並於二零零零年獲委任為本公司董事及於二零一八年四月獲委任為本公司董事局主席。彼亦出任本公司集團總裁，負責本集團之管理及業務發展。蔣女士為本公司多間附屬公司之董事及為本公司之主要股東震雄投資有限公司及Chiangs' Industrial Holdings Limited之董事。彼為Proficient City Investments Limited（根據證券及期貨條例被視為本公司主要股東）之唯一董事及股東。彼取得美國衛斯理女子大學文學院學士，且對生產管理、營銷及市場推廣均擁有豐富的經驗。蔣女士為九龍倉置業地產投資有限公司（於香港聯合交易所有限公司（「聯交所」）上市）的獨立非執行董事。彼亦為中國人民政治協商會議廣東省委員會委員、中國塑料機械工業協會副會長、深圳工業總會副會長及深圳市機械行業協會副會長。彼曾於二零零零至二零二一年擔任中國人民政治協商會議深圳市委員會常務委員。彼曾為恒生銀行有限公司（於聯交所上市）的獨立非執行董事。蔣女士於二零零四年榮獲香港工業總會頒發「香港青年工業家獎」。蔣女士，現年57歲，為已故蔣震博士之女兒。

Executive Directors

Lai Yuen CHIANG *BA, JP*

Chairman and Chief Executive Officer

Ms. Chiang joined the Group in 1988 and was appointed a Director of the Company in 2000 and the Chairman of the board of the Company in April 2018. She is also the Chief Executive Officer of the Company responsible for the management and business development of the Group. Ms. Chiang holds directorships in various subsidiaries of the Company and is a Director of Chen Hsong Investments Limited and Chiangs' Industrial Holdings Limited, substantial shareholders of the Company. She is the sole Director and shareholder of Proficient City Investments Limited (deemed to be a substantial shareholder of the Company by virtue of the Securities and Futures Ordinance). She holds a bachelor degree of Arts from Wellesley College, U.S.A. and has extensive experience in production management, sales and marketing. Ms. Chiang is an Independent Non-executive Director of Wharf Real Estate Investment Company Limited (listed on The Stock Exchange of Hong Kong Limited (the "Stock Exchange")). She is also a member of Guangdong Provincial Committee of the Chinese People's Political Consultative Conference, Vice-President of China Plastics Machinery Industry Association, Vice-Chairman of the Federation of Shenzhen Industries and Vice-President of China Shenzhen Machinery Association. She had served as a standing committee member of the Shenzhen Committee of the Chinese People's Political Consultative Conference during 2000 to 2021. She was formerly an Independent Non-executive Director of Hang Seng Bank Limited (listed on the Stock Exchange). Ms. Chiang was awarded the "Young Industrialist Awards of Hong Kong" by the Federation of Hong Kong Industries in 2004. Ms. Chiang, aged 57, is a daughter of the late Dr. Chen CHIANG.

鍾效良 *BSc, MBA*

鍾先生於二零零一年加入本集團，並於二零零三年獲委任為本公司董事，彼亦出任集團策略及營銷總監。鍾先生為本公司若干附屬公司之董事。鍾先生，現年56歲，持有美國栢克萊大學電子工程及電腦科學學士學位，彼亦持有美國紐約市哥倫比亞大學工商管理(財務)碩士學位。在加入本集團前，鍾先生在銷售及市務、管理諮詢、財務分析及資訊科技方面擁有超過十四年的經驗。

Stephen Hau Leung CHUNG *BSc, MBA*

Mr. Chung joined the Group in 2001 and was appointed a Director of the Company in 2003. He also holds the position of Group Chief Officer–Strategy, Sales and Marketing. Mr. Chung holds directorships in certain subsidiaries of the Company. Mr. Chung, aged 56, holds a bachelor degree of Science in Electrical Engineering & Computer Science from the University of California, Berkeley. He also holds an MBA degree in Finance from Columbia University, New York City, U.S.A.. Prior to joining the Group, Mr. Chung, had more than 14 years' experience in sales and marketing, management consultancy, financial analysis and information technology.

獨立非執行董事

陳智思 *GBM, GBS, JP*

陳先生於二零零四年獲委任為本公司董事。陳先生，現年58歲，於美國加州Pomona College畢業。彼曾於二零零八年至二零二三年期間擔任中華人民共和國全國人民代表大會之代表。彼亦曾出任香港特別行政區行政會議非官守議員的召集人及立法會議員。彼現任香港泰國商會、M Plus博物館有限公司及大館文化藝術有限公司之主席。此外，彼亦為香港社會服務聯會主席、西九文化區管理局董事局副主席及香港賽馬會董事。陳先生現為亞洲金融集團(控股)有限公司(於香港聯合交易所有限公司(「聯交所」)上市)之主席、執行董事及總裁、亞洲保險有限公司之執行董事及主席，以及盤谷銀行(中國)有限公司顧問。彼亦為有利集團有限公司、華潤啤酒(控股)有限公司、國泰航空有限公司及中電控股有限公司之獨立非執行董事，該等公司均於聯交所上市。陳先生亦為Bumrungrad Hospital Public Company Limited之董事，該公司於泰國上市。

Independent Non-executive Directors

Bernard Charnwut CHAN *GBM, GBS, JP*

(former name: CHAN Chi Sze Bernard)

Mr. Chan was appointed a Director of the Company in 2004. Mr. Chan, aged 58, is a graduate of Pomona College in California, U.S.A.. He had been a Deputy to the National People's Congress of the People's Republic of China from 2008 to 2023. He is also the former Convenor of the Non-official Members of the Executive Council and a former member of the Legislative Council of the Hong Kong Special Administrative Region. He is the Chairman of each of the Hong Kong-Thailand Business Council, M Plus Museum Ltd. and Tai Kwun Culture & Arts Co. Ltd.. In addition, he serves as the Chairperson of The Hong Kong Council of Social Service, the Vice-Chairman of West Kowloon Cultural District Authority and a Steward of The Hong Kong Jockey Club. Mr. Chan is currently the Chairman, an executive director and the President of Asia Financial Holdings Limited (listed on The Stock Exchange of Hong Kong Limited (the "Stock Exchange")), an executive director and the Chairman of Asia Insurance Company, Limited, and an advisor to Bangkok Bank (China) Company Limited. He is an Independent Non-executive Director of Yau Lee Holdings Limited, China Resources Beer (Holdings) Company Limited, Cathay Pacific Airways Limited and CLP Holdings Limited, all of which are listed on the Stock Exchange. He is also a director of Bumrungrad Hospital Public Company Limited which is a company listed in Thailand.

許志偉 *BSc, MBA*

許先生，現年59歲，於二零二三年六月二十六日獲委任為本公司董事，有關委任自二零二三年七月一日起生效。彼擁有約十八年市場推廣及業務管理經驗，自二零一二年十月三十一日起為ClearVue Partners (Shanghai) Limited（主要從事私募股本投資）之董事總經理，負責整體業務發展及投資策略。於二零零二年至二零零六年，彼為Universal Music International Limited（主要從事音樂製作）之總裁，負責管理整個亞洲（日本除外）業務。於二零零六年十二月至二零一零年，彼於中國擔任百事（中國）投資有限公司（主要從事飲料銷售及分銷）中國飲料業務部副總裁，負責客戶服務關係策略。許先生現為K W Nelson Interior Design and Contracting Group Limited（於香港聯合交易所有限公司上市）之獨立非執行董事。彼曾為Quhuo Limited（於納斯達克交易所上市）之董事。許先生於一九八五年五月獲得美國Albany-SUNY大學經濟商業科學學士學位，及於一九九二年十二月獲得美國南加州大學工商管理碩士學位。

Harry Chi HUI *BSc, MBA*

Mr. Hui, aged 59, was appointed a director of the Company on 26 June 2023 and the appointment is effective from 1 July 2023. He has approximately 18 years of experience in marketing and business management. He is a managing director of ClearVue Partners (Shanghai) Limited, which is principally engaged in private equity investment, since 31 October 2012, and he is responsible for the overall business development and investment strategies. He was a president of Universal Music International Limited, which is principally engaged in music production, from 2002 to 2006, and he was responsible for managing overall business in Asia (except Japan). From December 2006 to 2010, he was a vice president of China beverages business unit of Pepsico Investment (China) Limited in the PRC, which is principally engaged in sale and distribution of beverages, and he was responsible for customer service relation strategies. Mr. Hui is currently an Independent Non-executive Director of K W Nelson Interior Design and Contracting Group Limited (listed on The Stock Exchange of Hong Kong Limited). He was formerly a director of Quhuo Limited (listed on NASDAQ). Mr. Hui obtained a Bachelor of Science in Economics and Business Degree from University at Albany-SUNY in the United States in May 1985 and a Master of Business Administration Degree from University of Southern California in the United States in December 1992.

Anish LALVANI *BSc, MBA*

Lalvani先生於二零零二年獲委任為本公司董事。彼為歐瑞國際貿易有限公司主席，該公司之業務遍布香港、歐洲、非洲及中東等地。彼曾於英國、美國、印度及香港工作和生活，並持有美國聖地牙哥大學工商管理碩士學位。Lalvani先生於新興市場之營銷擁有豐富經驗，與國內家電製造商（大部分均自設注塑設備）之關係非常密切。彼為青年總裁協會北亞洲區及香港分會的前主席。Lalvani先生，現年57歲，為亞洲文化協會香港分會委員會成員及香港科技大學商學院顧問委員會成員。彼分別於二零二零年三月十一日及二零一七年八月十七日辭任Kew Foundation／Council的理事／成員及Harvard Business School Association of Hong Kong Limited董事。

Anish LALVANI *BSc, MBA*

Mr. Lalvani was appointed a Director of the Company in 2002. He is the Chairman of Euro Suisse International Limited which has business interests in Hong Kong, Europe, Africa and the Middle East. He has lived and worked in the U.K., U.S.A., India and Hong Kong and holds an MBA degree from the University of San Diego. Mr. Lalvani has extensive marketing experience in the emerging markets and an in-depth knowledge of electrical appliances manufacturers in China – many of whom have in-house moulding facilities. He is the former Chairman for both the North Asia Region and the Hong Kong Chapter of the Young Presidents' Organization. Mr. Lalvani, aged 57, is a member of the Hong Kong Friends' Committee of Asian Cultural Council and a Member of the HKUST Business School Advisory Council. He resigned as a Trustee/Member of Kew Foundation/Council and a Director of Harvard Business School Association of Hong Kong Limited on 11 March 2020 and 17 August 2017, respectively.

董事之個人資料
Biographical Details of Directors

利子厚 *BA, MBA*

利先生於二零零八年獲委任為本公司董事，彼為私人投資管理公司Oxer Limited之董事。利先生於一九八七年在投資行業發展其事業，其後一直在跨國投資公司包括東方匯理投資有限公司及羅祖儒投資管理擔任高級管理職務，亦於一九九五年與他人共同創辦亞洲策略投資管理有限公司。利先生，現年62歲，於美國接受教育，並持有Bowdoin College文學士學位及波士頓大學工商管理碩士學位。利先生現為希慎興業有限公司(於香港聯合交易所有限公司(「聯交所」)上市)之非執行董事，以及香港賽馬會的董事局主席。彼過往曾為香港交易及結算所有限公司(於聯交所上市)的獨立非執行董事，以及香港場外結算有限公司的獨立非執行董事及主席。

Michael Tze Hau LEE *BA, MBA*

Mr. Lee was appointed a Director of the Company in 2008. He is a Director of Oxer Limited, a private investment company. Mr. Lee started his career in the investment industry in 1987 and has since held senior management positions in multinational investment companies including Indosuez Asia Investment Services Limited and Lloyd George Management. He also co-founded Asia Strategic Investment Management Limited in 1995. Mr. Lee, aged 62, was educated in the U.S.A. and holds a Bachelor of Arts Degree from Bowdoin College and a Master of Business Administration Degree from Boston University. Mr. Lee is a Non-executive Director of Hysan Development Company Limited (listed on The Stock Exchange of Hong Kong Limited (the "Stock Exchange")) and the Chairman of the Board of Stewards of The Hong Kong Jockey Club. He was previously an Independent Non-executive Director of Hong Kong Exchanges and Clearing Limited (listed on the Stock Exchange), and an Independent Non-executive Director and Chairman of OTC Clearing Hong Kong Limited.

陳慶光 *BA, BSSc*

陳先生於二零零一年獲委任為本公司董事。彼於二零一三年五月至二零一六年六月及二零一三年二月至二零一七年六月曾分別為Raimon Land Public Company Limited(於泰國證券交易所上市)行政總裁及董事。陳先生在紐約、香港及新加坡累積超過二十年的投資銀行經驗。彼曾於多間主要金融機構出任不同職務，當中包括JP Morgan、UBS Warburg、麥格理及BNP Paribas Capital (Singapore) Limited，而彼更曾為BNP Paribas Capital (Singapore) Limited之行政總裁，以及東南亞區企業融資業務之區域主管。彼曾跨地域為多個大型企業及政府機構提供意見。陳先生，現年62歲，畢業於新加坡國立大學，並曾榮獲Lim Tay Boh金獎及新加坡國立大學經濟學會著作獎。

Johnson Chin Kwang TAN *BA, BSSc*

Mr. Tan was appointed a Director of the Company in 2001. He was the Chief Executive Officer and a Director of Raimon Land Public Company Limited (listed on The Stock Exchange of Thailand) from May 2013 to June 2016 and from February 2013 to June 2017, respectively. Mr. Tan has over 20 years' experience in investment banking based out of New York, Hong Kong and Singapore. He had held various roles with leading financial institutions including JP Morgan, UBS Warburg, Macquarie and BNP Paribas Capital (Singapore) Limited where he was the Chief Executive Officer and regional head for their South East Asia corporate finance business. He has advised major corporations and government authorities across the region. Mr. Tan, aged 62, graduated from the National University of Singapore and was a recipient of the Lim Tay Boh gold medal and NUS Economics Society Book Prize.

企業管治報告書
Corporate Governance Report

企業管治常規

本公司董事局(「董事局」)深明良好企業管治常規對保障股東權益及提升本公司及其附屬公司(「本集團」)表現的重要性。董事局一直致力維持及確保高水平之企業管治常規。

於截至二零二三年三月三十一日止之年度內，本公司一直遵守香港聯合交易所有限公司(「聯交所」)證券上市規則(「上市規則」)附錄十四所載之企業管治守則(「企業管治守則」)之所有守則條文，惟與以下守則條文之偏離者除外：

根據守則條文第B.2.2條之規定，每名董事應至少每三年一次輪值退任。本公司之董事(除本公司主席外)須至少每三年一次輪值退任，因根據百慕達一九九一年震雄集團有限公司公司法，本公司主席及董事總經理毋須輪值退任。

根據守則條文第C.2.1條之規定，主席與集團總裁的角色應有區分，並不應由一人同時兼任。蔣麗苑女士為本公司董事局主席兼集團總裁。鑒於蔣女士的技能和經驗以及彼長期服務於本集團，該架構可視為適合本集團，並可為本集團提供強大且貫徹的領導力，為業務提供有效及高效的規劃及決策，以及能執行長期業務策略。

Corporate Governance Practices

The board of directors (the "Board") of the Company recognizes the importance of good corporate governance practices in safeguarding the interests of the shareholders and enhancing the performance of the Company and its subsidiaries (the "Group"). The Board is committed to maintaining and ensuring a high standard of corporate governance practices.

Throughout the year ended 31 March 2023, the Company has complied with all the code provisions of the Corporate Governance Code (the "CG Code") as set out in Appendix 14 to the Rules Governing the Listing of Securities (the "Listing Rules") on The Stock Exchange of Hong Kong Limited (the "Stock Exchange"), except for the following deviations:

Code provision B.2.2 provides that every director should be subject to retirement by rotation at least once every three years. The directors of the Company (except the Chairman of the Company) are subject to retirement by rotation at least once every three years as the Chen Hsong Holdings Limited Company Act, 1991 of Bermuda provides that the chairman and the managing director of the Company are not required to retire by rotation.

Code provision C.2.1 provides that the roles of Chairman and Chief Executive Officer should be separate and should not be performed by the same individual. Ms. Lai Yuen CHIANG is the Chairman of the Board and Chief Executive Officer of the Company. Given the skills and experience of Ms. CHIANG and her long term of service with the Group, this structure can be considered appropriate to the Group and can provide the Group with strong and consistent leadership for effective and efficient business planning and decisions, as well as execution of long term business strategies.

環境、社會及管治報告

於截至二零二三年三月三十一日止之財政年度內，本公司已根據上市規則第13.91條之規定，並已遵守上市規則附錄二十七環境、社會及管治報告指引載列的「不遵守就解釋」條文，並在本公司之「環境、社會及管治報告2022/23」中對相關信息進行披露。該報告總結了本集團業務在環境、社會及管治範疇所實行的政策、可持續發展策略、管理方針及措施，以及本集團在該範疇之表現；並將以另一份報告形式在本公司網站www.chenhsong.com及聯交所網站www.hkexnews.hk上刊載。

Environmental, Social and Governance Reporting

During the financial year ended 31 March 2023, the Company has complied with Rule 13.91 of the Listing Rules and the "comply or explain" provisions set out in Appendix 27 to the Listing Rules as Environmental, Social and Governance Reporting Guide, and made disclosures concerning relevant information in the "Environmental, Social and Governance Report 2022/23"of the Company which, outlines the policies, sustainability strategies, management approach and initiatives implemented by the Group and the performance of the Group in environmental, social and governance aspects of its business, and will be presented in a separate report and published on the websites of the Company at www.chenhsong.com and the Stock Exchange at www.hkexnews.hk.

企業文化

本集團致力以其宗旨、願景、價值觀和策略為本，創建正面、鼓勵進步的文化，並透過不懈地追求技術進步、創新製造、堅守優質服務水平以及堅持追求超卓的表現，立志成為注塑機行業的先驅。

董事局負責制定本集團的策略，以使其與本集團的宗旨、願景和價值觀保持一致，長遠而言，本集團將據此創造價值。於本年度內董事局已制定下列宗旨、願景、價值觀及策略：

Corporate Culture

The Group is committed to developing a positive and progressive culture that is built on its purpose, vision, values and strategy and aspiring to be the pioneer in the plastic injection moulding machinery industry through relentless pursuit of technological advancements, manufacturing innovations, uncompromising service levels and persistent pursuit for excellence.

The Board assumes responsibility for establishing the Group's strategy to align with its purpose, vision and values upon which the Group would generate value in the long run. During the year, the Board has established the following purpose, vision, values and strategy:

震雄的宗旨 **Chen Hsong's Purpose** 本著集團的經營格言及秉承著已故創辦人的理念，我們一直致力開發和完善注塑機技術： We have been dedicated to the development and perfecting of plastic injection moulding machinery technology under our business motto and our late founder's philosophy: 「客人所要的，就是我們要做的。」 「工業富民，民富國強。」 "Our Customer's Need is Our Command." "Industry Enriches People's Livelihood, Leading to Prosperity which Strengthens the Country."	**震雄的願景** **Chen Hsong's Vision** 以完美品質和先進科技為全球客戶創造最高價值，不斷創新，永遠走在注塑業的前方。 We keep to stand at the forefront of the plastic injection moulding industry, and create the greatest value for our global customers, through perfect quality, advanced technologies and relentless pursuit of innovation.
震雄的價值觀 **Chen Hsong's Values** • 品質至上，科技為本。 • 以客為先，創造價值。 • 人盡其才，追求卓越。 • 誠實進取，勇於擔當。 • 互惠互利，締造雙贏。 • 同心協力，永續發展。 • Quality is of paramount importance, technology is our core competence. • Customers come first, always create value. • Make full use of talents, encourage the pursuit of excellence. • Be honest, be aggressive, dare to embrace responsibility. • Seek mutual benefits, go for win-win. • Unity and team-work, ensure sustainable growth.	**震雄的策略** **Chen Hsong's Strategy** • 提高所有相關持份者的長期總回報。 • 開發新技術、新產品和新市場。 • 增强生產能力和成本控制。 • 可持續發展。 • 人才是增長及創新的關鍵。 • Enhancement of the long-term total return for all its stakeholders. • Development of new technologies, new products and new markets. • Production capacity and cost control. • Sustainability development. • Talents for growth and innovation.

董事局

於本報告書日期，董事局由兩名執行董事及四名獨立非執行董事組成：

Board of Directors

As at the date of this report, the Board consists of two executive directors and four independent non-executive directors:

執行董事：

蔣麗苑女士(*主席兼集團總裁*)
鍾效良先生

Executive Directors:

Ms. Lai Yuen CHIANG *(Chairman and Chief Executive Officer)*
Mr. Stephen Hau Leung CHUNG

獨立非執行董事：

陳智思先生
Anish LALVANI先生
利子厚先生
陳慶光先生

Independent Non-executive Directors:

Mr. Bernard Charnwut CHAN
Mr. Anish LALVANI
Mr. Michael Tze Hau LEE
Mr. Johnson Chin Kwang TAN

所有董事之個人資料詳列於本年報第23至26頁。每名董事具有廣泛及多年的從商及／或專業經驗，彼等之經驗、知識及專業技能對監察本集團的業務有莫大裨益。

The biographical details of all directors are set out on pages 23 to 26 of this annual report. Each director brings a wide range and years of business and/or professional experience to the Board. Their combined experience, knowledge and expertise are valuable in overseeing the Group's business.

於二零二三年六月二十六日(即本報告書日期)，許志偉先生獲委任為本公司之獨立非執行董事，有關委任自二零二三年七月一日起生效，詳情載於本公司於本報告書日期發出的公告。

Mr. Harry Chi HUI has been appointed as an independent non-executive director of the Company on 26 June 2023 (being the date of this report) and the appointment is effective from 1 July 2023, details of which are set out in the announcement issued by the Company on the date of this report.

本公司之董事名單與其角色和職能刊載於本公司及聯交所之網站上。

A list of directors of the Company and their roles and function is posted on the websites of the Company and the Stock Exchange.

董事局的角色及職責

董事局主要負責制定本集團的願景、策略方針、基本政策及策略性業務計劃；監控及管理本集團營運及財務表現；在本集團內全面履行最佳企業管治常規；及訂立適當之風險評估及管理政策以實現本集團的策略目標。

Role and Responsibilities of the Board

The primary responsibilities of the Board are to establish the Group's vision, strategic direction, general policies and strategic business plans; to monitor and control the operating and financial performance of the Group; to implement the best corporate governance practices throughout the Group; and to set appropriate policies to assess and manage risks in pursuit of the strategic objectives of the Group.

授予管理層權力

董事局將本公司日常營運之權力授予管理層，管理層由所有執行董事、管理人員及不同業務單位的營運總監組成。管理層主要負責履行董事局制定的策略及業務計劃，按董事局的政策及指令管理本集團的業務運作。

Delegation to Management

The Board has delegated the daily operations of the Company to the Management comprising all executive directors, management staff, and operating heads of different business units. The main responsibilities of the Management are to implement the strategies and business plans set by the Board and to manage the Group's business operations in accordance with the policies and directives of the Board.

董事局會議及出席率

董事局於年內舉行了六次會議，約於每季度舉行，以檢討本集團整體策略及營運和財務表現。公司秘書協助主席制訂董事局會議之議程並諮詢全體董事。董事局的所有定期會議通知最少在會議前十四天發給所有董事，所有董事均可提出討論事項列入會議議程。董事局會議紀錄初稿及最終定稿會發送全體董事以表達意見及作其紀錄之用。董事局會議紀錄詳細記錄董事局在會議上所考慮之事項及達致的決定，由公司秘書備存，董事可隨時查閱。

Board Meetings and Attendance

The Board held six meetings throughout the year at approximately quarterly intervals to review the overall strategies and the operating and financial performance of the Group. The Company Secretary assists the Chairman in setting the agenda for Board meetings in consultation with all directors. Notice of at least 14 days is given to all directors for all regular Board meetings, and all directors are given opportunity to include matters for discussion in the agenda. Drafts and final versions of minutes of Board meetings are sent to all directors for comment and records. Minutes of Board meetings with details of matters considered by the Board and decisions reached are kept by the Company Secretary and open for inspection by the directors.

於截至二零二三年三月三十一日止之財政年度內，本公司共舉行六次董事局會議及一次股東大會，每名董事之出席紀錄載列如下：

During the financial year ended 31 March 2023, six Board meetings and one general meeting were held and the attendance record of each director is as follows:

董事姓名 **Name of Director**	**董事局會議** **出席次數／會議次數** **Number of Board Meetings Attended/Held**	**股東大會** **出席次數／會議次數** **Number of General Meetings Attended/Held**
執行董事 **Executive Directors**		
蔣麗苑女士*(主席兼集團總裁)* Ms. Lai Yuen CHIANG *(Chairman and Chief Executive Officer)*	6/6	1/1
鍾效良先生 Mr. Stephen Hau Leung CHUNG	6/6	1/1
獨立非執行董事 **Independent Non-executive Directors**		
陳智思先生 Mr. Bernard Charnwut CHAN	6/6	1/1
Anish LALVANI先生 Mr. Anish LALVANI	6/6	1/1
利子厚先生 Mr. Michael Tze Hau LEE	6/6	1/1
陳慶光先生 Mr. Johnson Chin Kwang TAN	6/6	1/1

於截至二零二三年三月三十一日止之財政年度內，主席亦與獨立非執行董事舉行一次沒有其他董事出席的會議。

During the financial year ended 31 March 2023, the Chairman has also held a meeting with the independent non-executive directors without the presence of other Directors.

董事局定期會議的議程及會議文件於每次董事局會議日期前至少三天全部送交所有董事。全體董事均有權取得董事局文件及相關資料，及可在適當的情況下尋求獨立專業意見，費用由本公司支付。所有董事可取得公司秘書的意見和享用他的服務，以確保董事局程序和適用之規則及規例均獲得遵守。

The agendas and accompanying board papers for regular Board meetings are sent out in full package to all directors at least three days before the date of each Board meeting. All directors have access to board papers and related materials and may, in appropriate circumstances, seek independent professional advice at the Company's expense. All directors have access to the advice and services of the Company Secretary, who ensures that board procedures and applicable rules and regulations are followed.

董事責任保險

本公司已就董事及行政人員因本集團業務而引起之責任購買適當保險。本公司每年檢討保險所保障之範圍。

Liability Insurance for Directors

The Company has in force appropriate insurance coverage on directors' and officers' liabilities arising from the Group's business. The Company reviews the extent of insurance coverage on an annual basis.

主席及集團總裁

於截至二零二三年三月三十一日止之財政年度內，蔣麗苑女士為董事局主席兼本公司集團總裁。主席及集團總裁之角色已清楚界定，以確保彼管理本公司之問責性及職責。

Chairman and Chief Executive Officer

During the financial year ended 31 March 2023, Ms. Lai Yuen CHIANG was the Chairman of the Board and the Chief Executive Officer of the Company. The roles of the Chairman and the Chief Executive Officer are defined clearly to ensure the accountability and responsibility with respect to the management of the Company.

主席兼集團總裁專注本集團之整體企業發展及高層策略性方針，領導董事局及監督董事局之有效運作。

The Chairman and Chief Executive Officer focuses on overall corporate development and high-level strategic directions of the Group, provides leadership to the Board, and oversees the efficient functioning of the Board.

彼負責管理本集團的業務、制定政策及企業管理，並在管理層的協助下實施董事局採納的策略和措施。

She is responsible for managing the business of the Group, policy making and corporate management and the implementation of strategies and initiatives adopted by the Board with the support from the Management.

於本報告書日期，蔣麗苑女士為董事局主席兼本公司集團總裁。根據上市規則企業管治守則之守則條文第C.2.1條之規定，主席與集團總裁的角色應有區分，並不應由一人同時兼任。然而，鑒於蔣女士的技能和經驗以及彼長期服務於本集團，該架構可視為適合本集團，並可為本集團提供強大且貫徹的領導力，為業務提供有效及高效的規劃及決策，以及能執行長期業務策略。

As at the date of this report, Ms. Lai Yuen CHIANG is the Chairman of the Board and Chief Executive Officer of the Company. Pursuant to code provision C.2.1 of the CG Code of the Listing Rules, the roles of Chairman and Chief Executive Officer should be separate and should not be performed by the same individual. However, given the skills and experience of Ms. CHIANG and her long term of service with the Group, this structure can be considered appropriate to the Group and can provide the Group with strong and consistent leadership for effective and efficient business planning and decisions, as well as execution of long term business strategies.

委任、重選及罷免董事

所有獨立非執行董事獲委任之年期均不多於三年，惟須於本公司股東周年大會上由股東重選連任。

根據本公司之細則第109(A)條，除本公司主席及董事總經理外，當時在任三分之一之董事須於本公司股東周年大會上輪值退任及膺選連任。利子厚先生及陳慶光先生(均為獨立非執行董事)將於即將舉行之本公司股東周年大會上輪值退任，彼等合資格並願意膺選連任。

此外，任何於年內獲董事局委任以填補臨時空缺或增加董事局成員的董事，須履行董事職務直至下屆股東周年大會及將於該大會上符合資格可獲重選連任。根據本公司之細則第100條及上市規則附錄三第4(2)段，新委任的獨立非執行董事許志偉先生(自二零二三年七月一日起生效)將於即將舉行之本公司股東周年大會上退任，彼合資格並願意膺選連任。

Appointment, Re-election and Removal of Directors

All the independent non-executive directors are appointed for a term of not more than three years, subject to re-election by shareholders at the annual general meeting of the Company.

In accordance with the Bye-law 109(A) of the Company's Bye-laws, other than the Chairman and the managing director of the Company, one-third of the directors for the time being shall retire by rotation, and stand for re-election, at the annual general meeting of the Company. At the forthcoming annual general meeting of the Company, Mr. Michael Tze Hau LEE and Mr. Johnson Chin Kwang TAN (both being independent non-executive directors) will retire by rotation and, being eligible, have offered themselves for re-election.

In addition, any directors appointed by the Board during the year, either to fill a casual vacancy or as an addition to the Board, shall hold office until the next annual general meeting, and then shall be eligible for re-election at that meeting. According to Bye-law 100 of the Company's Bye-laws and paragraph 4(2) of Appendix 3 to the Listing Rules, Mr. Harry Chi HUI, being an independent non-executive director newly appointed with effect from 1 July 2023, shall retire at the forthcoming annual general meeting of the Company and, being eligible, has offered himself for re-election.

獨立非執行董事及董事局的獨立性

本公司深明董事局的獨立性對良好企業管治至關重要。為確保董事局獲得獨立的觀點及意見，若干機制經已制定，其實施及有效性亦會每年檢討，而提名委員會與董事局每年基於與獨立非執行董事有關的所有相關因素評估其獨立性，其中包括：

- 履行其職責所必備的個性、正直品格、專業知識及經驗；
- 對本公司事務投入的時間及精力；
- 堅決履行其身為獨立董事的職責和投入董事局工作；
- 就擔任獨立非執行董事申報利益衝突事項；

Independent Non-executive Directors and Board Independence

The Company acknowledges that Board independence is critical to good corporate governance. In order to ensure independent views and input are available to the Board, several mechanisms are in place, the implementation and effectiveness of which are annually reviewed, and the Nomination Committee and the Board are committed to assessing the directors' independence annually with regards to all relevant factors related to the independent non-executive directors including the following:

- required character, integrity, expertise and experience to fulfill their roles;
- time commitment and attention to the Company's affairs;
- firm commitment to their independent roles and to the Board;
- declaration of conflict of interest in their roles as independent non-executive directors;

- 擔任其他公司的董事職務或與其他董事存在重大關係；
- 不參與本公司的日常管理，亦不牽涉會影響其作出獨立判斷的任何關係或情況；
- 重新委任獨立非執行董事(包括長期任職的獨立非執行董事)的決定須以獨立決議案形式提交股東通過；及
- 主席在沒有執行董事及非執行董事出席的情況下定期與獨立非執行董事會面。

本公司致力確保董事局必須包括最少三名獨立非執行董事及當中至少三分之一成員為獨立非執行董事(或上市規則不時規定的更高人數下限)，而至少一名獨立非執行董事具備適當的專業資格，或具備適當的會計或相關的財務管理之專長。

本公司每名獨立非執行董事已與本公司訂立委任書，任期為不超過三年，並須根據本公司之細則規定輪值退任及可重選連任。儘管部分獨立非執行董事已出任董事局成員超過九年，但提名委員會及董事局認為此未有亦不會影響其獨立性判斷，因為相關董事多年來為本公司提供客觀及獨立的意見，並持續向董事局展現其履行獨立董事職責的堅定承諾，即能夠投入充裕的時間及精力到公司事務上，並確認將持續履行其職責。本公司董事局內獨立非執行董事在任超過九年，其續任應以獨立決議案形式由本公司股東審議通過。於致股東之通函內將載列董事局認為該獨立非執行董事仍屬獨立人士及應獲重選之原因。如候任獨立非執行董事將出任第七家(或以上)上市公司的董事，董事局將於通函內解釋為何其認為該候任獨立非執行董事仍可投入足夠時間履行董事責任。

- cross-directorships or significant links with other directors;
- no involvement in the daily management of the Company nor in any relationship or circumstances which would affect the exercise of their independent judgement;
- further re-appointment of an independent non-executive director (including the long-serving independent non-executive director) is subject to a separate resolution to be approved by the shareholders; and
- the Chairman meets with the independent non-executive directors regularly without the presence of the executive directors and non-executive directors.

The Company ensures that the Board shall include at least three independent non-executive directors and at least one-third of its members being independent non-executive directors (or such higher threshold as may be required by the Listing Rules from time to time), with at least one independent non-executive director possessing appropriate professional qualifications or accounting or related financial management expertise.

Each independent non-executive director of the Company has entered into a letter of appointment with the Company for a term of not more than three years and in accordance with the Company's Bye-laws is subject to retirement by rotation and eligible for re-election. Notwithstanding that some independent non-executive directors have served as Board members for more than nine years, the Nomination Committee and the Board are of the view that this does not and would not affect their independent judgement as they have been providing objective view and independent opinion to the Company over the years, and have continued to demonstrate a firm commitment to their independent roles and to the Board that they are able to devote sufficient time and attention to the Company's affairs and confirm that they will continue to demonstrate their commitment to their roles. Any further re-appointment of an independent non-executive director who has served the Company's Board for more than nine years will be subject to separate resolution to be approved by the shareholders of the Company. Reasons will be given in the circular to shareholders to explain why the Board believes those independent non-executive directors are still independent and should be re-elected. If the proposed independent non-executive director will be holding his seventh (or more) listed company directorship, the Board will explain in the circular why he will still be able to devote sufficient time to the Board.

本公司已接獲各獨立非執行董事根據上市規則第3.13條確認其獨立性的年度確認函。提名委員會已審閱及評估個別獨立非執行董事確認其獨立性的年度確認函，並認為所有獨立非執行董事均仍具獨立性(按照上市規則所界定的定義)。獨立非執行董事如有任何變動而導致可能影響其獨立性，彼需於切實可行的範圍內儘快通知本公司。許志偉先生(獲委任為獨立非執行董事，自二零二三年七月一日起生效)亦已於獲委任日期之前根據上市規則第3.13條就其獨立性向本公司提供書面確認。

The Company has received from each independent non-executive director an annual confirmation of his independence pursuant to Rule 3.13 of the Listing Rules. The Nomination Committee reviewed and assessed the individual independent non-executive director's annual confirmation of independence and considered all independent non-executive directors remained independent within the definition of the Listing Rules. The independent non-executive director is required to inform the Company as soon as practicable if there is any change that may affect his independence. Mr. Harry Chi HUI who has been appointed as an independent non-executive director with effect from 1 July 2023 has also provided a written confirmation of his independence to the Company pursuant to Rule 3.13 of the Listing Rules before the date of his appointment.

提名委員會及董事局亦已考慮各獨立非執行董事向董事局作出的貢獻及其履行作為獨立董事職責的決心。

The Nomination Committee and the Board have also taken into account the respective contributions to the Board of the independent non-executive directors and their firm commitments to their independent roles.

就須考慮之事項中若有主要股東或董事存在利益衝突，該事項會由獨立非執行董事主導。對於需要獨立股東於本公司股東特別大會上批准的關連交易，將會由獨立非執行董事組成的董事委員會向獨立股東提供意見。所有董事(包括獨立非執行董事)可隨時於其認為有需要時取得外部獨立專業意見。

The independent non-executive directors will take lead in considering matters which a substantial shareholder or a director has conflict of interest. Board committee comprising independent non-executive directors will be formed to advise the independent shareholders on connected transaction to be approved by the independent shareholders at the special general meeting of the Company. External independent professional advice shall also be available to all directors (including independent non-executive directors) whenever deemed necessary.

各獨立非執行董事知識淵博，經驗豐富，是董事局寶貴的一份子，對董事局作出了積極貢獻。此外，他們並無擔任其他公司的任何董事職務或因參與其他公司或機構的職務而與其他董事存在任何重大關係，從而與獨立非執行董事的職責產生利益衝突。他們並無參與本公司的日常管理，亦不牽涉會影響其作出獨立判斷的任何關係或情況。他們持續證明自身有能力對本公司事務提出獨立、全面及客觀的見解。

The wide breath of knowledge and diversity of their experiences make each of the independent non-executive directors invaluable members of, and active contributors, to the Board. Moreover, they do not hold any cross-directorships or have any significant links with other Directors through involvement in other companies or bodies that could give rise to conflicts of interest in their roles as Independent Non-executive Directors and they are not involved in the daily management of the Company nor in any relationships or circumstances which would affect the exercise of their independent judgment. They continue to demonstrate their ability to provide an independent, balanced and objective view to the affairs of the Company.

提名委員會信納各獨立非執行董事擁有履行其職責所必備的個性、正直品格及經驗。

The Nomination Committee was satisfied that each of the independent non-executive director has the required character, integrity and experience to fulfill the role of an independent non-executive director.

董事局感謝獨立非執行董事向董事局及董事局轄下的委員會作出的貢獻及獨立意見和指導。

The Board is grateful for the contribution and independent advice and guidance that the independent non-executive directors have been giving to the Board and the Board committees.

本公司已接獲所有董事能付出足夠時間(不時及按需要)履行其作為本公司董事的職責之確認函。此外，董事已適時向本公司披露其作為董事的利益及於公眾公司或組織擔任董事及其他職位和其他重大承擔，並須於其後有變更時儘快通知本公司。

Confirmations have been received from the directors that they are able to devote sufficient time as and when required to discharge their responsibility as a director of the Company. Besides, the directors have disclosed to the Company their interests as directors and other offices in public companies or organizations and other significant commitments in a timely manner and have updated the Company on any subsequent changes.

董事之持續培訓及發展

在獲委任加入董事局時，每名董事均收到一份全面、正式及專屬之入職資料，涵蓋本公司組織章程文件、管治政策及程序以及作為董事在一般、法定及監管規定上所須履行責任之資料，以確保其對本公司之營運、業務以及其於上市規則及其他相關法律及監管規定下之責任有確切了解。

Directors' Continuous Training and Development

On appointment to the Board, each director shall receive a comprehensive, formal and tailored induction package covering the Company's constitutional documents, governance policies and procedures of the Company as well as the general, statutory and regulatory obligations of being a director to ensure that he/she has a proper understanding of the Company's operations and business, and his/her responsibilities under the Listing Rules and other relevant legal and regulatory requirements.

董事亦定期獲簡介有關上市規則、企業管治常規、相關法例之修訂及本公司的業務發展。為使董事瞭解其職責及灌輸新的知識，於截至二零二三年三月三十一日之財政年度內已提供參閱資料(包括聯交所提供的網上培訓材料)。除由本公司作出之安排外，若干董事亦有參加其他外部培訓研討會。

The directors are regularly briefed on the amendments to or updates on the Listing Rules, corporate governance practices, other regulatory regime and the business development of the Company. To keep abreast of the responsibilities of the directors and infuse them with new knowledge, reading materials (including e-learning materials provided by the Stock Exchange) had been provided during the financial year ended 31 March 2023. Apart from what the Company had arranged, certain directors also attended other external training seminars.

董事須向本公司提供他們所參與的培訓之資料。根據所提供的資料，於截至二零二三年三月三十一日止之財政年度內，所有董事參與的培訓概述如下：

The directors are required to provide the Company with details of the training undertaken by them. Based on the details so provided, the training undertaken by the directors during the financial year ended 31 March 2023 is summarized as follows:

董事姓名 **Name of Director**	**參閱資料／期刊及／或出席簡報會／簡介會／網絡研討會／研討會／討論會（有關業務、董事責任、法規及企業管治）** **Reading Materials/Journals and/or Attending Briefings/Presentations/ Webinars/Seminars/Conferences (Relevant to the Business, Directors' Duties, Regulatory & Corporate Governance)**
執行董事 **Executive Directors**	
蔣麗苑女士*(主席兼集團總裁)* Ms. Lai Yuen CHIANG *(Chairman and Chief Executive Officer)*	✓
鍾效良先生 Mr. Stephen Hau Leung CHUNG	✓
獨立非執行董事 **Independent Non-executive Directors**	
陳智思先生 Mr. Bernard Charnwut CHAN	✓
Anish LALVANI先生 Mr. Anish LALVANI	✓
利子厚先生 Mr. Michael Tze Hau LEE	✓
陳慶光先生 Mr. Johnson Chin Kwang TAN	✓

董事證券交易

本公司已就董事進行證券交易採納一套操守準則(「操守準則」)，其條款的嚴格程度不低於上市規則附錄十上市發行人董事進行證券交易的標準守則(「標準守則」)的條款。經本公司向全體董事作出特定查詢，本公司確認全體董事於截至二零二三年三月三十一日止之年度內，一直遵守操守準則及標準守則所規定的標準。

Directors' Securities Transactions

The Company has adopted a Code of Conduct regarding Securities Transactions by the Directors (the "Code of Conduct") on terms no less exacting than the required standard as set out in the Model Code for Securities Transactions by Directors of Listed Issuers (the "Model Code") contained in Appendix 10 to the Listing Rules. The Company, after having made specific enquiry of all directors, confirms that all directors have complied with the required standard set out in the Code of Conduct and the Model Code throughout the year ended 31 March 2023.

董事局的組成

董事局現時由六名成員組成，其中兩名為執行董事(包括主席兼集團總裁)及四名為獨立非執行董事。於本報告書日期，新增一名獨立非執行董事獲委任，自二零二三年七月一日起生效。主席、執行董事和獨立非執行董事的姓名載於以上「董事局」一節中。獨立非執行董事為本集團提供廣泛專業知識和經驗，並起制衡作用，以確保股東的利益。董事局成員來自不同背景，擁有商業及專業等專長。董事之個人資料載於本年報第23至26頁內。本公司及聯交所網站載有本公司最新的董事局成員名單，並列明其角色和職能，以及註明其是否獨立非執行董事。在所有披露本公司董事名字的企業通訊中亦以如上方式闡明獨立非執行董事身份。

Board Composition

The Board currently comprises six members, consisting of two executive directors (including the Chairman and Chief Executive Officer) and four independent non-executive directors. On the date of this report, one additional independent non-executive director has been appointed with effect from 1 July 2023. The name of chairman, executive directors and independent non-executive directors are set out under the heading "Board of Directors" aforementioned. Independent non-executive directors provide the Group with a wide range of expertise and experience as well as checks and balances to safeguard the interests of the shareholders. Members of the Board, who come from a variety of different backgrounds, have a diverse range of business and professional expertise. The biographical details of the directors are set out on pages 23 to 26 of this annual report. The updated list of directors of the Company identifying their roles and function and whether they are independent non-executive directors is available on the websites of the Company and the Stock Exchange. Independent non-executive directors are also identified as such in all corporate communications that disclose the names of directors of the Company.

董事局在委任成員及甄選候選人時將客觀地考慮廣泛而多元化觀點與角度，其中包括但不限於性別、年齡、文化及教育背景、專業資格及經驗、技能、知識、任期以及行業及地區經驗，以及董事局可能不時認為屬相關及適當的其他因素。

Appointments of Board members and selection of candidates are considered objectively based on a range of diversity perspectives, including, but not limited to, gender, age, cultural and educational background, professional qualifications and experience, skills, knowledge, length of service and industry and regional experience that the Board may consider relevant and appropriate from time to time.

董事局的組成反映其成員在技能、經驗及多元化觀點與角度均保持適當平衡，能配合本集團的戰略、管治及業務，為董事局的有效運作作出貢獻。於二零二三年三月三十一日，董事局之成員組合及其成員之技能組合分析如下：

The Board's composition reflects an appropriate balance of skills, experience and diversity of perspectives among its members that are relevant to the Group's strategy, governance and business and contribute to the Board's effectiveness. Analyses of the Board's composition and its members' skill set mix as at 31 March 2023 are as follows:

(a) 董事局的組成及多元化

(a) Board Composition and Diversity

觀點與角度 Diversity Perspective	分類 Category	董事數目 Number of Directors	概約百分比 Approximate Percentage
性別 Gender	男性 Male	5	83.3%
	女性 Female	1	16.7%
國籍 Nationality	中國籍 Chinese	2	33.3%
	非中國籍 Non-Chinese	4	66.7%
年齡組別 Age group	60歲以上 Over 60	2	33.3%
	51-60歲 / years	4	66.7%
任期 Length of service	20年或以上 20 years or over	4	66.7%
	10-19 年 / years	2	33.3%
身份 Capacity	執行董事 Executive Director	2	33.3%
	獨立非執行董事 Independent Non-executive Director	4	66.7%
於其他上市公司擔任董事*(公司數目)* Other listed company directorship(s) *(number of companies)*	6	1	16.7%
	1	2	33.3%
	0	3	50.0%

(b) 董事技能和經驗

(b) Board Skills and Experience

董事姓名 Name of Director	行政領導及策略／於其他上市公司擔任董事或高級行政人員經驗 Executive Leadership & Strategy/Directorship or Senior Executive Experience with Other Listed Company(ies)	工業及製造業 Industry and Manufacturing	中國內地 Mainland China	環球商業 Global Business	科技 Technology	環境、社會及管治 Environmental, Social and Governance	專業會計／財務管理專業知識／法律及循規 Accounting Professional/ Financial Management Expertise/Legal and Compliance
執行董事 **Executive Directors**							
蔣麗苑女士*(主席兼集團總裁)* Ms. Lai Yuen CHIANG *(Chairman and Chief Executive Officer)*	✓	✓	✓	✓	✓	✓	✓
鍾效良先生 Mr. Stephen Hau Leung CHUNG	✓	✓	✓	✓	✓		✓
獨立非執行董事 **Independent Non-executive Directors**							
陳智思先生 Mr. Bernard Charnwut CHAN	✓		✓	✓	✓	✓	✓
Anish LALVANI先生 Mr. Anish LALVANI	✓	✓	✓	✓	✓	✓	✓
利子厚先生 Mr. Michael Tze Hau LEE	✓		✓	✓	✓	✓	✓
陳慶光先生 Mr. Johnson Chin Kwang TAN	✓			✓	✓	✓	✓
合計(名) **Total (in number)**	**6**	**3**	**5**	**6**	**6**	**5**	**6**
合計(概約百分比) **Total (in approximate percentage)**	**100%**	**50%**	**83%**	**100%**	**100%**	**83%**	**100%**

審核委員會

審核委員會於一九九八年成立。於本報告書日期，審核委員會成員包括四名獨立非執行董事陳智思先生、Anish LALVANI先生、利子厚先生及陳慶光先生。Anish LALVANI先生為委員會主席。於二零二三年六月二十六日(即本報告書日期)，許志偉先生獲委任為審核委員會成員，有關委任自二零二三年七月一日起生效。

Audit Committee

The Audit Committee was established in 1998. As at the date of this report, the Audit Committee comprises four independent non-executive directors, namely Mr. Bernard Charnwut CHAN, Mr. Anish LALVANI, Mr. Michael Tze Hau LEE and Mr. Johnson Chin Kwang TAN. Mr. Anish LALVANI is the Committee Chairman. Mr. Harry Chi HUI has been appointed as a member of the Audit Committee on 26 June 2023 (being the date of this report) and the appointment is effective from 1 July 2023.

審核委員會的角色是確保本公司具有正式及具透明度的安排，以考慮有關本集團財務匯報、風險管理及內部監控事項，並且監察本公司與外聘核數師的關係。審核委員會之職權範圍已於本報告書日期更新，並載於本公司及聯交所之網站上。

The roles of the Audit Committee are to ensure that the Company has formal and transparent arrangements for considering matters relating to the Group's financial reporting, risk management and internal control and overseeing the Company's relationship with the Company's external auditor. The terms of reference of the Audit Committee, as updated on the date of this report, are available on the websites of the Company and the Stock Exchange.

於截至二零二三年三月三十一日止之財政年度內，審核委員會曾舉行兩次會議(合共四節)，與本公司外聘核數師以及外聘顧問審閱本集團之財務業績和檢討內部監控及相關事項。每名成員之出席紀錄載列如下：

The Audit Committee held two meetings (totalling four sessions) during the financial year ended 31 March 2023 to review with the Company's external auditor and external consultant, the Group's financial results and internal controls and related matters. The attendance record of each member is as follows:

審核委員會成員 **Members of Audit Committee**	**出席次數／會議次數** **Number of Meetings Attended/Held**
獨立非執行董事 **Independent Non-executive Directors**	
陳智思先生 Mr. Bernard Charnwut CHAN	2/2
Anish LALVANI先生 Mr. Anish LALVANI	2/2
利子厚先生 Mr. Michael Tze Hau LEE	2/2
陳慶光先生 Mr. Johnson Chin Kwang TAN	2/2

於截至二零二三年三月三十一日止之財政年度內，審核委員會已進行：

During the financial year ended 31 March 2023, the Audit Committee had:

- 檢討本集團全年及中期財務報表之真確性及公平性，並與外聘核數師討論；
- 審閱會計準則之變動，以及評估對本集團財務報表之影響；
- 就續聘外聘核數師提出建議及檢討其審核費用；

- reviewed the Group's annual and interim financial statements with respect to their true and fairness, and discussed with the external auditor;
- reviewed the changes in accounting standards and their impacts on the Group's financial statements;
- made recommendation on the re-appointment of external auditor and reviewed their audit fees;

- 檢討本集團內部監控系統之有效性；
- 通過二零二二／二零二三年的內部審核計劃；
- 審閱外聘內部監控顧問之內部審核結果和推薦意見，以及管理層之相關回應；
- 檢討本公司在會計及財務匯報職能方面的資源、員工資歷及經驗，以及員工所接受的培訓課程及有關預算是否足夠；
- 檢討本集團遵守監管規定及法定要求之情況；
- 審閱風險管理監控之年度計劃；
- 審閱風險管理之更新；
- 審閱風險評估報告；及
- 檢討並建議董事局採納反貪污政策及經修訂之舉報政策。

- reviewed the effectiveness of the Group's internal control systems;
- approved the 2022/2023 Internal Audit Plan;
- reviewed the internal audit findings and recommendations of the external internal control consultant and the respective responses of the Management;
- reviewed the adequacy of resources, staff qualifications and experience, training programmes and budget of the Company's accounting and financial reporting function;
- reviewed the Group's compliance with regulatory and statutory requirements;
- reviewed the annual plan on risk management control;
- reviewed the update on risk management;
- reviewed the risk assessment reports; and
- reviewed and made recommendations to the Board to adopt the Anti-Corruption Policy and the revised Whistleblowing Policy.

薪酬委員會

薪酬委員會於二零零五年成立。於本報告書日期，薪酬委員會成員包括四名獨立非執行董事陳智思先生、Anish LALVANI先生、利子厚先生及陳慶光先生，以及主席、執行董事及集團總裁蔣麗苑女士。陳智思先生為委員會主席。薪酬委員會之職權範圍已於二零二三年三月更新，並載於本公司及聯交所之網站上。

Remuneration Committee

The Remuneration Committee was established in 2005. As at the date of this report, the Remuneration Committee comprises four independent non-executive directors, namely Mr. Bernard Charnwut CHAN, Mr. Anish LALVANI, Mr. Michael Tze Hau LEE and Mr. Johnson Chin Kwang TAN, and the Chairman, Executive Director and Chief Executive Officer, Ms. Lai Yuen CHIANG. Mr. Bernard Charnwut CHAN is the Committee Chairman. The terms of reference of the Remuneration Committee, as updated in March 2023, are available on the websites of the Company and the Stock Exchange.

薪酬委員會之主要職責為就董事及高級管理人員之薪酬政策及架構，及就設立正規而具透明度之程序制定薪酬政策，向董事局推薦意見，亦因應企業方針及目標而檢討及制訂本集團執行董事及高級管理人員之薪酬及就非執行董事之薪酬向董事局提出建議。薪酬委員會考慮之因素包括執行董事及高級管理人員之職務和責任及可供比較之公司所支付之薪酬數額。此外，薪酬委員會亦負責審閱及／或批准與上市規則規定的股份計劃有關的事項。

The main responsibilities of the Remuneration Committee are to make recommendations to the Board on the policy and structure for the remuneration of directors and senior management and on the establishment of a set of formal and transparent procedures for development its remuneration policy. It also reviews and determines the remuneration packages for executive directors and senior management and to make recommendations to the Board on the remuneration for non-executive directors of the Group with reference to the corporate goals and objectives. The Remuneration Committee considers factors such as duties and responsibilities of the executive directors and senior management and the amount of remuneration paid by comparable companies. In addition, the Remuneration Committee is also responsible for reviewing and/or approving matters relating to the share schemes under the Listing Rules.

執行董事之薪酬福利包括薪金、津貼、與表現掛鉤之花紅及退休金。截至二零二三年三月三十一日止之財政年度內之董事薪酬資料載於本年報內財務報表附註9。

Remuneration packages of executive directors comprises salary, allowances, performance related bonus and pension scheme contributions. Information about directors' emoluments during the financial year ended 31 March 2023 is set out in note 9 to the financial statements of this annual report.

薪酬政策

董事局採納薪酬政策，通過正式及透明之程序實施薪酬政策，旨在確認適當的薪酬水平對於吸引、留住和激勵本公司董事以成功營運本公司至關重要，以及確保董事的薪酬水平恰當，並與本公司所制定的目標、目的及業績表現一致，以提升本公司股東的價值。根據薪酬政策，執行董事之薪酬及非執行董事之袍金已按照以下主要原則而制定：

- 執行董事之薪酬將由薪酬委員會及董事局每年檢討一次。
- 薪酬委員會將參照執行董事之職位、資歷、經驗、所肩負的職責，及本集團的業績表現及盈利向董事局建議批准任何有關執行董事薪酬之修訂。

Remuneration Policy

The Board adopted a Remuneration Policy which aims to recognize that appropriate level of remuneration is crucial to attract, retain and motivate the directors of the Company to run the Company successfully, and to ensure that the directors' remuneration is appropriate and aligns with the Company's goals, objectives and performance and to enhance the value of shareholders of the Company, through a set of formal and transparent procedures for implementing the Remuneration Policy. Pursuant to the Remuneration Policy, the following key principles have been established for determination of the remuneration and other remuneration related matters of individual director:

- Executive directors' emoluments shall be reviewed annually by the Remuneration Committee and the Board.
- Recommendations shall be made by the Remuneration Committee to the Board for approval of any revision to the executive directors' emoluments by reference to his/her position, qualifications, experience, level of responsibilities and the Group's performance and profitability.

- 執行董事可具備資格獲得參照市場狀況以及企業與個人表現因素而釐定的酌情花紅及／或表現花紅及／或保證花紅。

- Executive directors may be eligible to receive discretionary bonus and/or performance bonus and/or guaranteed bonus taking into consideration factors such as market conditions as well as corporate and individual performances.

- 薪酬委員會將根據本公司之購股權計劃及持股計劃(如有)審閱及向董事局建議(如合適)審批授出購股權及／或獎勵股份予執行董事。該計劃讓執行董事擁有本公司之權益，以鼓勵或獎勵彼等對本集團作出之貢獻或將可作出之貢獻。

- The Remuneration Committee shall review and if appropriate, recommend to the Board for approval the grant of share options and/or the award of shares to the executive directors under the share option scheme and share ownership scheme (if any) of the Company. Such scheme(s) enables the executive directors to obtain an ownership interest in the Company as incentives or rewards for their contribution or potential contribution to the Group.

- 非執行董事之袍金將由薪酬委員會及董事局每年檢討一次。

- Non-executive directors' fees shall be reviewed annually by the Remuneration Committee and the Board.

- 董事局將參照非執行董事之經驗、職務與職責及市場情況向股東建議於股東大會批准有關非執行董事袍金之修訂。

- Recommendations shall be made by the Board to the shareholders for approval at the shareholders' meeting any revision to the non-executive directors' fees by reference to his/her experience, duties, responsibilities and market conditions.

- 任何有關非執行董事袍金之修訂亦須受限於在相應財政年度支付給所有非執行董事的董事袍金總額的年度限額，並且該限額的任何調整將根據本公司之細則由股東批准。

- Any change of non-executive directors' fees shall also be subject to an annual limit on the aggregate amount of non-executive directors' fees payable to all the non-executive directors during the respective financial year, and any adjustment of such limit shall require approval by the shareholders pursuant to the Company's Bye-laws.

於截至二零二三年三月三十一日止之財政年度內，薪酬委員會曾舉行四次會議。每名成員之出席紀錄載列如下：

The Remuneration Committee held four meetings during the financial year ended 31 March 2023. The attendance record of each member is as follows:

薪酬委員會成員 **Members of Remuneration Committee**	出席次數／會議次數 **Number of Meetings Attended/Held**
獨立非執行董事 **Independent Non-executive Directors**	
陳智思先生 Mr. Bernard Charnwut CHAN	4/4
Anish LALVANI先生 Mr. Anish LALVANI	4/4
利子厚先生 Mr. Michael Tze Hau LEE	4/4
陳慶光先生 Mr. Johnson Chin Kwang TAN	4/4
執行董事 **Executive Director**	
蔣麗苑女士*(主席兼集團總裁)* Ms. Lai Yuen CHIANG *(Chairman and Chief Executive Officer)*	4/4

於截至二零二三年三月三十一日止之財政年度內，薪酬委員會評估董事之職務和責任及個別表現以及公司業績，經諮詢主席及集團總裁之建議後，檢討、通過並就有關執行董事(同時為本公司高級管理人員)之薪酬福利(包括基本薪金及表現掛鉤花紅)以及獨立非執行董事之袍金向董事局給予推薦意見。並無個別董事在會議上就其本人之薪酬福利投票。薪酬委員會亦檢討並建議董事局採納薪酬政策及經修訂之薪酬委員會職權範圍。

During the financial year ended 31 March 2023, the Remuneration Committee had reviewed, approved and made recommendations to the Board on the matters relating to the remuneration packages (including basic salaries and performance related bonus) of the executive directors (also being the senior management of the Company) and the directors' fees of the independent non-executive directors after assessing their duties and responsibilities and individual performance as well as the corporate performance and in consultation with the proposals of the Chairman and Chief Executive Officer. No individual director took part in voting his/her own remuneration at the meeting. The Remuneration Committee had also reviewed and made recommendations to the Board to adopt the Remuneration Policy and the revised terms of reference of the Remuneration Committee.

提名委員會

提名委員會於二零一二年成立。於本報告書日期，提名委員會成員包括四名獨立非執行董事陳智思先生、Anish LALVANI先生、利子厚先生及陳慶光先生。陳慶光先生為委員會主席。提名委員會之職權範圍已於本報告書日期更新，並載於本公司及聯交所之網站上。

Nomination Committee

The Nomination Committee was established in 2012. As at the date of this report, the Nomination Committee comprises four independent non-executive directors, namely Mr. Bernard Charnwut CHAN, Mr. Anish LALVANI, Mr. Michael Tze Hau LEE and Mr. Johnson Chin Kwang TAN. Mr. Johnson Chin Kwang TAN is the Committee Chairman. The terms of reference of the Nomination Committee, as updated on the date of this report, are available on the websites of the Company and the Stock Exchange.

提名委員會之職責為檢討董事局的架構、人數及組成(包括技能、知識及經驗方面)，並就任何為配合本公司企業策略以及參考本公司董事會成員多元化政策，從而擬對董事局作出的變動提出建議，物色具備合適資格可擔任董事的人士，並挑選提名有關人士出任董事或就此向董事局提出建議，評核獨立非執行董事的獨立性，且就董事委任或續任以及董事繼任計劃向董事局提出建議。

The Nomination Committee is responsible for reviewing the structure, size and composition (including the skills, knowledge and experience) of the Board and making recommendations on any proposed changes to the Board to complement the Company's corporate strategy and to make reference to the Company's Board Diversity Policy, identifying individuals suitably qualified to become Board members and select or make recommendations to the Board on the selection of individuals nominated for directorships, assessing the independence of independent non-executive directors, and making recommendations to the Board on the appointment or re-appointment of directors and succession planning for directors.

董事會成員多元化政策

董事局於二零二二年十一月採納及修訂董事會成員多元化政策(「該政策」)，該政策為達致董事局成員多元化而制訂的方案。該政策摘要如下：

- 於至少每年一次檢討董事局的架構、人數及成員多元化時，提名委員會將循多方面考慮董事局成員的多元化，當中包括但不限於性別、年齡、文化及教育背景、專業資格及經驗、技能、知識、任期和行業及區域經驗(「董事會成員多元化準則」)，並就任何為配合本公司企業策略而擬對董事局作出的變動提出建議。
- 於物色及提名適當人選為董事局成員時，提名委員會將會考慮董事會成員多元化準則。
- 提名委員會將至少每年在適當時候檢討該政策的實施，因應最新企業管治準則討論任何或需作出的修訂，再向董事局提出修訂建議，由董事局審查、審批，以確保該政策行之有效。

Board Diversity Policy

The Board adopted and revised the Board Diversity Policy (the "Policy") in November 2022 which sets out the approach to achieve diversity on the Board. The Policy is summarized below:

- In reviewing the structure, size and diversity of the Board at least annually, the Nomination Committee will consider a number of aspects of the Board diversity, including but not limited to gender, age, cultural and educational background, professional qualifications and experience, skills, knowledge, length of service and industry and regional experience (the "Board Diversity Criteria") and make recommendations on any proposed changes to the Board to complement the Company's corporate strategy.
- In selection and nomination of qualified individuals to become Board members, the Nomination Committee will consider the Board Diversity Criteria.
- The Nomination Committee will review the implementation of the Policy on an annual basis, as appropriate, discuss any revisions in line with the latest corporate governance standards that may be required, and recommend any such revisions to the Board for review, consideration and approval to ensure the effectiveness of the Policy.

董事局重視本集團各個層面的多元化(包括性別多元化)。於本年報日期，董事局由七名董事組成，其中一名是女性，比率為14.3%。董事局認為董事局的性別比例已經實現。有關本集團全體員工(包括高級管理人員)的性別比例以及相關資料的詳情，請查閱本公司之「環境、社會及管治報告2022/23」。

The Board emphasizes on diversity (including gender diversity) across all levels of the Group. As at the date of this annual report, the Board comprises seven Directors, one of whom is female, it stands at 14.3%. The Board considers that gender diversity on the Board has been achieved. Further details on the gender ratio of the Group across the workforce (including senior management), together with relevant data, can be found in the "Environmental, Social and Governance Report 2022/23" of the Company.

提名政策

董事局於二零一八年十一月採納提名政策，載列提名及委任董事的條件及程序。董事局將相關篩選及委任董事過程授權予提名委員會，以確定合適的候選人成為董事局成員並向董事局推薦。在評估建議候選人的適合性時，提名委員會將考慮和評估候選人性格及誠信、資格、技能、經驗、性別和在董事會成員多元化政策下與公司業務和企業策略相關的特徵，投入足夠的時間以有效履行職務及是否符合上市規則第3.13條所載之獨立性要求(就獨立非執行董事而言)。經評估後，提名委員會提名適當的候選人予董事局批准和任命。對於任何由股東在公司股東大會上提名選舉為董事的人，提名委員會應根據上述標準對該候選人進行評估，以確定該候選人是否有資格擔任董事職務。在適當情況下，提名委員會於股東大會上就建議膺選董事向股東推薦建議。

Nomination Policy

The Board adopted a Nomination Policy in November 2018 which sets out the criteria and process on the nomination and appointment of directors. The Board has delegated the relevant selection and appointment of directors to the Nomination Committee, which identifies suitable qualified candidates to become Board members and recommends them to the Board. In assessing the suitability of a proposed candidate, the Nomination Committee would assess and evaluate the candidate's character and integrity, qualifications, skills, experience, gender and diversity aspects under the Board Diversity Policy that are relevant to the Company's business and corporate strategy, devoting adequate time to effectively carry out their duties, and fulfilment of the independence requirements as set out in Rule 3.13 of the Listing Rules (for independent non-executive directors). After the evaluation, the Nomination Committee nominates the appropriate candidate to the Board for approval and appointment. For any person that is nominated by a shareholder for election as a director at the general meeting of the Company, the Nomination Committee should evaluate such candidate based on the criteria as set out above to determine whether such candidate is qualified for directorship. Where appropriate, the Nomination Committee should make recommendation to shareholders in respect of the proposed election of director at the general meeting.

於截至二零二三年三月三十一日止之財政年度內，提名委員會曾舉行兩次會議。每名成員之出席紀錄載列如下：

The Nomination Committee held two meetings during the financial year ended 31 March 2023. The attendance record of each member is as follows:

提名委員會成員 Members of Nomination Committee	出席次數／會議次數 Number of Meetings Attended/Held
獨立非執行董事 **Independent Non-executive Directors**	
陳智思先生 Mr. Bernard Charnwut CHAN	2/2
Anish LALVANI先生 Mr. Anish LALVANI	2/2
利子厚先生 Mr. Michael Tze Hau LEE	2/2
陳慶光先生 Mr. Johnson Chin Kwang TAN	2/2

於截至二零二三年三月三十一日止之財政年度內，提名委員會已檢討及討論董事局的架構、人數及多元化，評估獨立非執行董事之獨立性，且已批准於二零二二年股東周年大會上提呈重選退任董事的提名。提名委員會亦檢討並建議董事局採納經修訂之董事會成員多元化政策。

During the financial year ended 31 March 2023, the Nomination Committee had reviewed and discussed the structure, size and diversity of the Board, assessed the independence of independent non-executive directors, and approved the nomination of the retiring directors to seek for re-election at the 2022 Annual General Meeting. The Nomination Committee had also reviewed and made recommendations to the Board to adopt the revised Board Diversity Policy.

企業管治委員會

企業管治委員會(「企業管治委員會」)於二零一二年成立。於本報告書日期，企業管治委員會成員包括四名獨立非執行董事陳智思先生、Anish LALVANI先生、利子厚先生及陳慶光先生。利子厚先生為委員會主席。於二零二三年六月二十六日(即本報告書日期)，許志偉先生獲委任為企業管治委員會成員，有關委任自二零二三年七月一日起生效。企業管治委員會之職權範圍已於本報告書日期更新。

Corporate Governance Committee

The Corporate Governance Committee (the "CG Committee") was established in 2012. As at the date of this report, the CG Committee comprises four independent non-executive directors, namely Mr. Bernard Charnwut CHAN, Mr. Anish LALVANI, Mr. Michael Tze Hau LEE and Mr. Johnson Chin Kwang TAN. Mr. Michael Tze Hau LEE is the Committee Chairman. Mr. Harry Chi HUI has been appointed as a member of the CG Committee on 26 June 2023 (being the date of this report) and the appointment is effective from 1 July 2023. The terms of reference of the CG Committee have been updated on the date of this report.

企業管治委員會之職責為制定及檢討本公司的企業管治政策及常規，並向董事局提出建議，檢討及監察董事及高級管理人員的培訓及持續專業發展，檢討及監察本公司在遵守法律及監管規定方面的政策及常規，制訂、檢討

The CG Committee is responsible for developing and reviewing the Company's policies and practices on corporate governance and making recommendations to the Board, reviewing and monitoring the training and continuous professional development of directors and senior management, reviewing and monitoring the Company's policies

及監察適用於本公司董事及僱員的操守準則，檢討董事會獨立性政策的相關性及有效性，以及檢討本公司遵守企業管治守則的情況及於本報告書內的披露。

and practices on compliance with legal and regulatory requirements, developing, reviewing and monitoring the Code of Conduct applicable to the directors and employees of the Company, reviewing the relevance and effectiveness of the Board Independence Policy and reviewing the Company's compliance with the CG Code and disclosures in this report.

於截至二零二三年三月三十一日止之財政年度內，企業管治委員會曾舉行兩次會議。每名成員之出席紀錄載列如下：

The CG Committee held two meetings during the financial year ended 31 March 2023. The attendance record of each member is as follows:

企業管治委員會成員 **Members of Corporate Governance Committee**	**出席次數／會議次數** **Number of Meetings Attended/Held**
獨立非執行董事 **Independent Non-executive Directors**	
陳智思先生 Mr. Bernard Charnwut CHAN	2/2
Anish LALVANI先生 Mr. Anish LALVANI	2/2
利子厚先生 Mr. Michael Tze Hau LEE	2/2
陳慶光先生 Mr. Johnson Chin Kwang TAN	2/2

於截至二零二三年三月三十一日止之財政年度內，企業管治委員會已檢討本公司企業管治的遵守情況、董事填寫之董事會評核問卷、董事及有關僱員進行證券交易守則的遵守情況、以及董事及高級管理人員的培訓及持續專業發展的紀錄。企業管治委員會亦檢討並建議董事局採納董事會獨立性政策及經修訂之股東通訊政策及內幕消息指引。

During the financial year ended 31 March 2023, the CG Committee had reviewed the corporate governance compliance status of the Company, the board evaluation questionnaires completed by the directors, the compliance with the Codes for Securities Transactions by Directors and Relevant Employees and the training and continuous professional development records of directors and senior management. The CG Committee had also reviewed and made recommendations to the Board to adopt the Board Independence Policy and the revised Shareholders' Communication Policy and Inside Information Guidelines.

外聘核數師酬金

截至二零二三年三月三十一日止之財政年度，外聘核數師之酬金合共為港幣3,089,000元，其中港幣2,709,000元為審核服務，港幣159,000元為稅務服務及港幣221,000元為其他非審核服務。

External Auditor's Remuneration

External auditor's remuneration for the financial year ended 31 March 2023 amounted to a total of HK$3,089,000, of which HK$2,709,000 was incurred for audit services, HK$159,000 for tax-related services and HK$221,000 for other non-audit services.

問責性及審核

本集團截至二零二三年三月三十一日止之財政年度內的綜合財務報表已由外聘核數師安永會計師事務所審核及經審核委員會審閱。董事確認彼等對編製本集團綜合財務報表負有責任，該等財務報表乃依照法定要求及適用會計準則編製。

外聘核數師就其審核本集團截至二零二三年三月三十一日止年度之綜合財務報表之責任聲明，載於本年報第81至89頁之獨立核數師報告書內。

Accountability and Audit

The consolidated financial statements of the Group for the financial year ended 31 March 2023 have been audited by the external auditor, Ernst & Young, and reviewed by the Audit Committee. The directors acknowledge their responsibility for preparing the consolidated financial statements of the Group which were prepared in accordance with statutory requirements and applicable accounting standards.

A statement by the external auditor about the responsibilities for the audit of the consolidated financial statements of the Group for the year ended 31 March 2023 is set out in the Independent Auditor's Report on pages 81 to 89 of this annual report.

風險管理及內部監控

本集團知悉其業務和經營的市場潛在若干風險（包括環境、社會及管治風險），在實踐企業目標時，會查証重大風險並為其進行監控，以使能夠達至持續增長和長期股東價值。本集團實施一套全面的風險管理及內部監控系統（「監控系統」），其設計是提供合理保證，而非杜絕，重大風險的識別和管理，業務是根據管理層的授權進行，資產得到保障，財務報表準確可靠和可供刊印，以及集團的活動有遵守適用法律和規例。

Risk Management and Internal Control

The Group acknowledges certain aspects of risks (including environmental, social and governance risks) are inherent in its businesses and the markets it operates, and in pursuit of its corporate objectives, undertakes to determine and monitor material risks in order to enable sustainable growth and long term shareholder value. The Group implements a comprehensive Risk Management and Internal Control System (the "Control System") which is designed to provide reasonable, but not absolute, assurance that significant risks are identified and managed, transactions are executed in accordance with management's authorization, assets are protected, the financial statements are accurate and reliable for publication, and the Group's activities are in compliance with applicable laws and regulations.

風險管理和內部監控程序已與本集團的日常業務和營運融合，其涉及對風險的理解、識別潛在的風險、評估可能產生的後果、確定風險水平、設立適當的緩解措施，以及適當的報告跟進情況。

該監控系統包含一套組織監控架構，強調責任界定、權力分配和職責分工。風險管治的最高架構為董事局，彼監督及負責該監控系統的運作，確保監控系統的足夠和有效，並瞭解有關系統旨在管理而非消除未能達成業務目標

The risk management and internal control process is embedded in the Group's daily businesses and operations, which involves understanding the context, identifying potential exposures, assessing the likelihood of consequences, determining the risk level, establishing appropriate mitigating measures and followed by appropriate reporting.

The Control System involves an organizational control structure which emphasizes defined lines of duties and responsibilities, delegation of authority and segregation of duties. At the top of the risk governance structure sits the Board who oversees and is responsible for the Control System and ensures its adequacy and effectiveness and acknowledge that

的風險，而且只能就不會有重大的失實陳述或損失作出合理而非絕對的保證。董事局授權風險管理委員會施行監控系統，風險管理委員會成員包括高級及有經驗的管理層。風險管理委員會監督監控系統的實施，並為其提供適當的指引和工具，追蹤重大風險和緩解行動，和查証已出現的重大監控缺失或弱點。風險管理委員會委託業務單位和其內部的功能組別執行該監控系統。各業務單位均由一名總經理及財務總監領導，其職責是監控業務單位的操作，確保有合適和充分的營運政策、準則和程式，並確保它們的妥善執行。功能組別主管在他們日常決策過程中執行風險評估，並向業務單位主管匯報重大風險。通過與各業務單位和功能組別主管的討論，風險管理委員會透過獨立外聘內部監控顧問協助呈送及概括風險評估報告，並與審核委員會商討。

such system is designed to manage rather than eliminate the risk of failure to achieve business objectives, and can only provide reasonable but not absolute assurance against material misstatement or loss. The Board delegates implementation responsibilities of the Control System to the Risk Management Committee which comprises senior and experienced members of management. The Risk Management Committee supervises and facilitates the implementation of the Control System with appropriate guidelines and tools, tracks material risks and mitigating activities, and determines significant control failings or weaknesses that have occurred. The execution of the Control System is entrusted to the Business Units, and within the Business Units, the Functional Groups. Each Business Unit is headed by a General Manager and Financial Controller whose duties are to control the activities of the Business Unit, ensure appropriate and adequate operational policies, standards and procedures are in place and are properly executed. The heads of the Functional Groups exercise risk assessment in their daily decision making processes, escalate and report material risks to the Business Unit heads. Through discussion with the respective Business and Functional Unit heads, the Risk Management Committee as supported by an independent external internal control consultant whom presents and summarizes a Risk Assessment Report for discussion with the Audit Committee.

對困難的風險監控事項，本集團可尋求外部專業人員的協助。

The Group is able to call for assistance from outside professionals to support difficult risk controlling matters.

審核委員會和內部審核

董事局委任具備企業管理豐富經驗的獨立非執行董事組成審核委員會，訂有明確職權範圍。審核委員會受託監察及評估監控系統是否足夠及有效。審核委員會亦會辨識有待改善的地方，檢討本集團在會計、內審和財務匯報功能方面的資源、員工資歷及經驗、培訓課程及預算是否足夠。

Audit Committee and Internal Audit

The Board appoints the Audit Committee with clear terms of reference, which comprises independent non-executive directors who are well-experienced in corporate management. The Audit Committee oversees and evaluates the adequacy and effectiveness of the Control System. It also identifies areas for improvement, reviews the adequacy of resources, staff qualifications and experience, training programmes and budget of the Group's accounting, internal audit and financial reporting functions.

董事局透過審核委員會將本集團內部審核職能授予一家獨立專業公司作為外聘內部監控顧問，負責定期檢討業務單位及／或營運附屬公司的業務流程及營運，就其在工作過程中識別的監控事宜、風險及建議提交報告。董事局認為，本集團的風險管理及內部監控制度有效及足夠。外聘內部監控顧問亦設計一套以風險

The Board, through the Audit Committee, has delegated the internal audit function of the Group to an independent professional firm which was appointed to act as an external internal control consultant, to conduct regular reviews of the business process and operations of Business Units and/or operating subsidiaries and report findings, risk and recommendations on any control issues identified in the course of their work. The Board considers that the Group's risk management

為基礎的方法以進行內部審核，並制定年度內部審核計劃及檢討範圍，覆蓋本集團營運、業務單位的主要活動及程序。該等審核活動的結果會交予審核委員會及業務單位及功能組別主管。內部審核職能會查察審核事務，並於其後跟進，力求妥善實行，並會定期向審核委員會匯報其進展。公司秘書備存所有審核委員會會議之完整會議紀錄。審核委員會會議紀錄的初稿及最終定稿會發送全體委員會成員，以供彼等表達意見及作具紀錄之用。

and internal control systems are effective and adequate. The external internal control consultant also developed a risk-based approach for the internal audit and established annual internal audit plan and scope of review, covering major activities and processes of the Group's operations, businesses and Business Units. The results of these audit activities are communicated to the Audit Committee and heads of the Business Units and the Functional Groups. Audit issues are tracked, followed up for proper implementation, and their progress are reported to the Audit Committee periodically. The Company Secretary keeps full minutes of all Audit Committee meetings. Drafts and final versions of minutes of the Audit Committee meetings are sent to all committee members for their comment and records.

外聘審核

董事局任命外聘核數師安永會計師事務所為本集團的財務報表進行獨立法定審核工作。外聘核數師與審核委員會出席會議，以討論和匯報審核的性質及範圍，以及於審核綜合財務報表過程中發現之內部監控之任何重大缺失及在審核中的重大發現。

External Audit

The Board appoints the external auditor, Ernst & Young, to perform independent statutory audits of the Group's financial statements. The external auditor attends meetings with the Audit Committee, discuss and report the nature and scope of the audit, any significant deficiencies in internal control identified during the audit of the consolidated financial statements, and significant findings from the audit.

2023年度測評

於年內，一家獨立專業公司獲委任為外聘內部監控顧問，對若干主要附屬公司業務的內部監控及風險管理系統作出檢討，旨在辨識監控系統的不足之處並提出改善建議。 評估結果已於年內呈送審核委員會。除了監控系統，本集團設有舉報政策，以供僱員及其他與本集團有往來者(如客戶及供應商)通報其關注的問題、或本集團其他員工所作出的任何可疑不當或瀆職行為提出疑問。所有舉報事宜均會在保密及獨立的情況下予以處理及調查。為遵守實踐有關誠信和負責任的商業道德，本集團亦已制定反貪污政策，向本集團所有業務單位和僱員提供如何識別及處理貪污和賄賂以及本集團企業捐款及贊助活動的資訊及指引。舉報政策及反貪污政策的更多詳情，可查閱本公司之「環境、社會及管治報告2022/23」。舉報政策及反貪污政策均經過審核委員會審閱，並將定期更新，以確保其適當性符合公司和監管要求。

2023 Assessment

During the year, an independent professional firm, acting as an external internal control consultant, was appointed to conduct the review of internal control and risk management systems for certain principal subsidiaries' operation with a view to identifying any gaps in the Control System and making recommendations for improvement. The results of such assessments were submitted to the Audit Committee during the year. In addition to the Control System, a Whistleblowing Policy has been put in place such that employees and those who deal with the Group (e.g. customers, suppliers etc.) can raise their concerns about any suspected misconduct or malpractice within the Group. All reported whistleblowing matters were handled and investigated confidentially and independently. To adhere to practicing integrity and responsible business ethics, the Group has also established Anti-Corruption Policy which provides information and guidances to all business units and employees of the Group on how to recognize and deal with corruption and bribery and to handle corporate donation and sponsorship activities of the Group. More details in relation to the Whistleblowing Policy and the Anti-Corruption Policy can be found in the "Environmental, Social and Governance Report 2022/23" of the Company. The Whistleblowing Policy and the Anti-Corruption Policy have been reviewed by the Audit Committee and are to be updated periodically to ensure their appropriateness and compliance with corporate and regulatory requirements.

基於各項測評，董事局認為截至二零二三年三月三十一日止年度有足夠和有效的風險管理和內部監控制度。本集團在會計、財務匯報和內審職能方面以及與公司環境、社會及管治表現和匯報相關的資源、員工資歷及經驗、培訓課程及預算是足夠的。本集團截至二零二三年三月三十一日止年度已遵守風險管理和內部監控守則條文。

Based on the respective assessments, the Board acknowledges that an adequate and effective risk management and internal control process was in place for the year ended 31 March 2023. The resources, qualifications, experience, training programmes and budget of the employees of the Group's accounting and financial reporting and internal audit functions as well as those relating to the Company's environmental, social and governance performance and reporting were adequate. The Group has complied with the risk management and internal control code provisions for the year ended 31 March 2023.

股息政策

董事局已制定股息政策，載列本公司於考慮向本公司股東宣派、派付或分派其純利作為股息時擬應用的原則及指引。本公司向股東宣派及派付股息時，派付股息須遵守百慕達法例及本公司之細則及任何其他適用規例及監管限制。

Dividend Policy

The Board has established a Dividend Policy setting out the principles and guidelines that the Company intends to apply when considering the declaration, payment or distribution of its net profits as dividends to the shareholders of the Company. The payment of dividend is also subject to any restrictions under the Bermuda laws and the Company's Bye-laws and any other applicable statutory and regulatory restrictions, during declaration and payment of dividends to shareholders of the Company.

處理及發放內幕消息的程序和內部監控措施

本公司遵循證券及期貨條例(「證券及期貨條例」)第XIVA部和上市規則的規定，於知悉任何內幕消息後，在合理地切實可行的範圍內，儘快向公眾披露該消息，除非有關消息屬於證券及期貨條例下任何「安全港條文」的範圍。本公司在向公眾全面披露有關消息前，會確保該消息絕對保密。若本公司認為無法保持所需的機密性，或該消息可能已外泄，會即時向公眾披露該消息。本公司致力確保公告中所載的資料不得在某事關重要的事實方面屬虛假或具誤導性，或因遺漏某事關重要的事實而屬虛假或具誤導性，使公眾能平等、適時及有效地取得所披露的內幕消息。

Procedures and Internal Controls for the Handling and Dissemination of Inside Information

The Company complies with the requirements of Part XIVA of the Securities and Futures Ordinance (the "SFO") and the Listing Rules. The Company discloses inside information to the public as soon as reasonably practicable after any inside information has come to its knowledge unless the information falls within any of the "Safe Harbours" as provided for in the SFO. Before the information is fully disclosed to the public, the Company ensures the information is kept strictly confidential. If the Company believes that the necessary degree of confidentiality cannot be maintained or that confidentiality may have been breached, the Company would immediately disclose the information to the public. The Company is committed to ensure that information contained in announcements are not false or misleading as to a material fact, or false or misleading through the omission of a material fact, to provide for equal, timely and effective access by the public to the inside information disclosed.

就根據證券及期貨條例及上市規則處理及發放內幕消息而言，本公司已採取不同程序及措施，包括提高本公司內幕消息的保密意識，定期向有關董事和僱員發送禁售期和證券交易限制的通知，以及在需要知情的基礎上向指定人員傳播信息。董事局已制定及修訂內幕消息指引，並將定期作出檢討以確保其相關性及有效性。

For the purpose of handling and disseminating inside information in accordance with the SFO and the Listing Rules, the Company has taken various procedures and measures, including arousing the awareness to preserve confidentiality of inside information with the Company, sending blackout period and securities dealing restrictions notification to the relevant directors and employees regularly, and disseminating information to specified persons on a need-to-know basis. The Board has established and revised the Inside Information Guidelines and will regularly review to ensure its relevance and effectiveness.

公司秘書

公司秘書為本公司之僱員，對本公司的日常事務有所認識。公司秘書向主席及集團總裁匯報。所有董事均可取得公司秘書的意見和享用他的服務，以確保董事局程序及適用法律、規則及規例均獲得遵守。公司秘書於回顧年度內一直遵守上市規則第3.29條。

Company Secretary

The Company Secretary is an employee of the Company and has day-to-day knowledge of the Company's affairs. The Company Secretary reports to the Chairman and Chief Executive Officer. All directors have access to the advice and services of the Company Secretary to ensure that board procedures, and applicable laws, rules and regulations are followed. The Company Secretary had complied with Rule 3.29 of the Listing Rules during the year under review.

股東權利

股東請求召開股東特別大會

根據百慕達一九八一年公司法(經修訂)(「百慕達公司法」)之條文，凡於請求送達日期持有不少於本公司已繳足股本(該股本於送達日期附有在本公司股東大會上進行投票的權利)十分之一(10%)之股東，皆有權請求董事召開本公司股東特別大會。有關之請求應註明召開股東特別大會之目的，由請求召開會議之人士簽署後送達本公司之註冊地址。

若董事於有關召開會議請求送達日期起計二十一天內仍未召開股東特別大會，請求召開會議之人士(或當中佔超過一半(50%)總投票權之人士)可自行召開本公司股東特別大會。

於股東大會上提出建議

根據百慕達公司法之條文，於請求送達日期有權於本公司股東大會投票之全體股東中佔不少於二十分之一(5%)總投票權之股東或至少100名本公司股東，可在本公司股東大會上提出任何可能被正式或刻意動議之決議案，該動議決議案之請求連同一份不多於1,000字有關該動議決議案所提述事宜之陳述書，須於股東大會前不少於六星期送達本公司之註冊地址。

Shareholders' Rights

Convening of Special General Meeting on Requisition

Pursuant to the provisions of the Companies Act 1981 of Bermuda (as amended) (the "Bermuda Companies Act"), shareholders holding at the date of the deposit of the requisition not less than one-tenth (10%) of the paid-up share capital of the Company as at the date of the deposit which carries the right of voting at general meetings of the Company have the right to requisite the directors to convene a special general meeting of the Company. The requisition must state the purposes of the special general meeting, and must be signed by the requisitionist and deposited at the registered office of the Company.

If the directors do not within 21 days from the date of the deposit of the requisition proceed duly to convene a special general meeting, the requisitionist, or any of them representing more than one-half (50%) of the total voting rights of all of them, may themselves convene a special general meeting of the Company.

Putting Forward Proposals at General Meetings

Pursuant to the provisions of the Bermuda Companies Act, shareholders representing not less than one-twentieth (5%) of the total voting rights of all the shareholders having at the date of the requisition a right to vote at general meetings of the Company or of at least 100 shareholders in number of the Company, may put forward any resolution which may properly be moved and is intended to be moved at a general meeting of the Company by sending the requisition together with a statement of not more than 1,000 words with respect to the matter referred to in the proposed resolution must be deposited at the registered office of the Company not less than six weeks before the general meeting.

根據本公司之細則第114條，股東可向本公司總辦事處呈交一份書面提名通知(連同被推選人士簽發表明其願意膺選之書面通知)提名個別人士(本公司退任董事除外)於股東大會參選本公司董事，通知期為最少七日(該期間由不早過就該推選之指定股東大會通知寄發後當日起至不遲過該股東大會日期前七日止)。股東提名個別人士參選董事之程序刊載於本公司之網站上。

Pursuant to Bye-law 114 of the Company's Bye-laws, shareholder(s) may propose a person other than a retiring director of the Company for election as a director of the Company at the general meeting by lodging at the head office of the Company, a written notice of nomination with the written notice signed by the nominated person of his willingness to be elected, for a period of at least 7 days which shall commence no earlier than the day after the despatch of the notice of general meeting appointed for such election and end no later than 7 days before the date of such general meeting. Procedures for shareholders to propose a person for election as a director are posted on the website of the Company.

與股東之溝通

董事局深明與所有股東保持良好溝通的重要性，透過刊發年報、中期報告、公告及致股東的通函，致力履行公開和及時地披露相關資料的政策。為確保股東及投資者可平等及即時取得本集團的最新資料，本公司的網站(www.chenhsong.com)載有重要的企業資訊、年報和中期報告、以及本公司刊發的公告及通函。本公司向股東提供英文或中文(或兩者)版本的公司通訊，以助股東了解其內容。股東有權選擇公司通訊的收取方式(印刷本或電子形式)。董事局已制定股東通訊政策(其載於本公司之網站上)並定期作出檢討以確保其成效。

Communication with Shareholders

The Board recognizes the importance of good communications with all shareholders and is committed to a policy of open and timely disclosure of relevant information through publication of annual and interim reports, announcements and circulars to shareholders. To enable the shareholders and investors have equal and timely access to updated information about the Group, the Company's website (www.chenhsong.com) contains important corporate information, annual and interim reports, as well as announcements and circulars issued by the Company. Corporate communications will be provided to the shareholders in either or both English and Chinese version(s) to facilitate the shareholders' understanding. The shareholders have the right to choose the means of receipt of the corporate communications (in hard copy or through electronic means). The Board has established a Shareholders' Communication Policy, which is available on the Company's website, and is regularly reviewed to ensure its effectiveness.

本公司慣常地於刊發中期及全年業績公告後舉行簡報會，並會與機構性投資者和投資分析員直接會面及進行電話會議，以確保股東及潛在投資者充分了解本公司之業務。為確保所有股東及潛在投資者同時獲得相同的資訊，內幕消息會根據上市規則透過刊發公告發放。

The Company usually conducts briefing immediately following the publication of the announcement of interim and annual results. Face-to-face meetings and conference calls with institutional investors and investment analysts are conducted to make sure that shareholders and potential investors can obtain a good understanding of the Company's business. To ensure all shareholders and potential investors receive equal access to information at the same time, inside information is released by publication of announcements pursuant to the Listing Rules.

股東周年大會為股東與董事局交流意見提供重要的平台。董事局鼓勵股東出席股東周年大會，有關通知在大會舉行前至少二十一天前發出。董事局、集團總裁連同董事局轄下的委員會之主席(或在彼等缺席的情況下，該委員會之其他成員)在股東周年大會上回應股東

The annual general meeting provides a useful forum for shareholders to exchange views with the Board. Shareholders are encouraged to attend the annual general meeting for which at least 21 days prior notice is given. The Board, the Chief Executive Officer and the Chairmen of the Board committees (or in their absence, other members of the committees) are available to answer shareholders' questions at the annual general

的提問。此外，本公司外聘核數師的代表亦應要求出席股東周年大會，以回應有關審計工作、編製核數師報告書及其內容、會計政策以及核數師之獨立性等問題。

meeting. In addition, a representative of the Company's external auditor is requested to attend the annual general meeting to answer questions about the conduct of the audit, the preparation and content of the auditor's report, the accounting policies and auditor independence.

在任何需要獨立股東批准關連交易的股東特別大會上，獨立董事委員會成員將出席大會並致力解答股東的提問。

In the case of any special general meeting to approve a connected transaction which is subject to independent shareholders' approval, members of the independent Board committee will also make an effort to attend the meeting to address shareholders' queries.

於股東大會上，重要事項(包括重選個別董事)以個別決議案處理。所有載列於股東大會通告內的決議案均於大會上以投票方式表決。投票表決結果已刊載於本公司及聯交所之網站上。

Significant issues are dealt with under separate resolutions at general meeting, including re-election of individual directors. All resolutions set out in the notice of general meeting put to the vote at the meeting were by way of a poll. The results of the voting by poll were published on the websites of the Company and the Stock Exchange.

本公司歡迎各股東及有興趣人士透過本公司企業傳訊及投資者關係部提出查詢，聯絡資料詳列於本年報內「公司資料」一節。股東如對名下持股有任何問題，應向本公司的股份過戶登記處提出。

Shareholders and interested parties are welcome to raise enquiries through the Company's Corporate Communications & Investor Relations Department. The contact details are set out in the section headed "Corporate Information" of this annual report. Shareholders should direct their questions about their shareholdings to the Company's Share Registrars.

董事局已檢討溝通渠道之實施情況，並基於上述而言，認為股東通訊政策已於年內有效地實施。

The Board has reviewed the implementation of the communication channels and, based on the above, considered the Shareholders' Communication Policy has been effectively implemented during the year.

組織章程文件

本公司於二零二二年八月二十六日舉行的股東周年大會上通過特別決議案，採納本公司新細則(「新細則」)，以取代及摒除本公司現有細則。新細則將所有修訂予以整合，以(其中包括)使現有細則符合最新上市規則(包括上市規則附錄三所載核心的股東保障水平)及最新百慕達法例。該等修訂之詳情載於本公司日期為二零二二年七月二十六日之股東通函。新細則載於本公司及聯交所之網站上。

Constitutional Documents

At the annual general meeting of the Company held on 26 August 2022, a special resolution was passed to adopt the new Bye-laws of the Company (the "New Bye-laws") in substitution for and to the exclusion of the existing Bye-laws of the Company. The New Bye-laws consolidated all the amendments to, among other things, bring the constitution of the Company in line with provisions of the latest Listing Rules including the Core Shareholder Protection Standards set out in Appendix 3 to the Listing Rules and the latest Bermuda laws. Details of the amendments are set out in the circular to the shareholders of the Company dated 26 July 2022. The New Bye-laws is available on the websites of the Company and the Stock Exchange.

除上文所披露者外，於截至二零二三年三月三十一日止之財政年度內，本公司之組織章程文件並無任何變動。

Save as disclosed above, there was no change in the Company's constitutional documents during the financial year ended 31 March 2023.

董事局報告書
Report of the Directors

本公司董事局(「董事局」)現提呈本集團截至二零二三年三月三十一日止年度之董事局報告書及經審核財務報表。

The board of directors (the "Board") of the Company present its report and the audited financial statements of the Group for the year ended 31 March 2023.

主要業務及營運分析

本公司之主要業務為投資控股及提供管理服務。

The principal activities of the Company are investment holding and the provision of management services.

於本年度內本集團之主要業務並無重大改變，附屬公司之主要業務包括製造及銷售注塑機及相關產品。

The principal activities of the subsidiaries comprise the manufacture and sale of plastic injection moulding machines and related products. There were no significant changes in the nature of the Group's principal activities during the year.

本集團按經營板塊的收益及年度業績貢獻分析詳情載於財務報表附註5。

Details of the analysis of the Group's revenue and contribution to results for the year, by operating segments, are set out in note 5 to the financial statements.

業務審視

香港公司條例附表5規定關於本集團之業務審視，包括對本集團業務的中肯審視；對本集團面對的主要風險及不明朗因素的描述；在該財政年度終結後發生的、對本集團有影響的重大事件的詳情；本集團業務相當可能有的未來發展的揭示；運用財務關鍵表現指標對本集團表現進行的分析；對本集團的環境政策及表現的探討；本集團就對其有重大影響的有關法律及規例的遵守情況的探討；以及本集團與其主要持份者關係的說明，可分別參閱本年報第8至10頁之「主席報告書」、第11至22頁之「管理層之論述及分析」及封面內頁之「財務摘要」。上述部分構成本報告書的一部分。

Business Review

The business review of the Group as required by Schedule 5 to the Hong Kong Companies Ordinance, including a fair review of the Group's business; a description of the principal risks and uncertainties facing the Group; particulars of important events affecting the Group that have occurred since the end of the financial year; an indication of likely future development in the Group's business; an analysis of the Group's performance using financial key performance indicators; a discussion on the Group's environmental policies and performance; a discussion on the Group's compliance with the relevant laws and regulations that have a significant impact on the Group; and an account of the Group's relationships with its key stakeholders, can be found in the "Chairman's Statement", "Management's Discussion & Analysis" and "Financial Highlights" on pages 8 to 10, pages 11 to 22 and the inside cover of this annual report, respectively. The above sections form part of this report.

本集團之金融風險管理目標及政策載於財務報表附註40。

The financial risk management objectives and policies of the Group are set out in note 40 to the financial statements.

業績及股息

本集團截至二零二三年三月三十一日止年度之業績及本集團於該日之財務狀況載於本年報第90至223頁之財務報表。

董事局建議派發末期股息每股普通股港幣7.3仙予於二零二三年九月七日名列本公司股東名冊上之股東。待股東於即將舉行之本公司股東周年大會上批准後，末期股息將約於二零二三年九月二十一日派發予股東。擬派發之末期股息連同已於二零二三年一月十二日派付之中期股息每股普通股港幣4.5仙，本年度合共派發股息每股普通股港幣11.8仙。

Results and Dividends

The Group's results for the year ended 31 March 2023 and the financial position of the Group at that date are set out in the financial statements on pages 90 to 223 of this annual report.

The Board recommends the payment of a final dividend of HK7.3 cents per ordinary share to the shareholders whose names appear on the register of members of the Company on 7 September 2023. Subject to the approval of the shareholders at the forthcoming annual general meeting of the Company, the final dividend will be payable to shareholders on or about 21 September 2023. The proposed final dividend together with the interim dividend of HK4.5 cents per ordinary share paid on 12 January 2023, make a total dividend of HK11.8 cents per ordinary share for the year.

五年財務摘要

本集團過往五個財政年度之業績及資產、負債與非控股權益摘要載於本年報第227頁。此摘要並不構成本集團經審核財務報表之部分。

Five-Year Financial Summary

A summary of the results and of the assets, liabilities and non-controlling interests of the Group for the last five financial years is set out on page 227 of this annual report. This summary does not form part of the audited financial statements of the Group.

投資物業

本集團於二零二三年三月三十一日之投資物業已由獨立及專業資格估值師公司作估值。投資物業之公平值並無任何變動於綜合收益表確認。本集團於本年度內投資物業之變動詳情載於財務報表附註15。本集團於二零二三年三月三十一日持有之投資物業之詳情載於第228頁。

Investment Properties

The Group's investment properties as at 31 March 2023 were revalued by an independent firm of professionally qualified valuers. No change in fair value of investment properties has been recognized in the consolidated income statement. Details of the movements in the investment properties of the Group during the year are set out in note 15 to the financial statements. Particulars of the investment properties held by the Group as at 31 March 2023 are set out on page 228.

物業、廠房及設備

於年內，本集團之物業、廠房及設備變動詳情載於財務報表附註14。

Property, Plant and Equipment

Details of the movements in property, plant and equipment of the Group during the year are set out in note 14 to the financial statements.

已發行股本

本公司的已發行股本於年內並沒有變動。

Issued Share Capital

There is no movement in the Company's issued share capital during the year.

股票掛鉤協議

除本年報所披露之本公司購股權計劃外，本集團於年內並無訂立股票掛鉤協議，亦無在本年度終結時存在股票掛鉤協議。

Equity-linked Agreements

Save for the share option scheme of the Company as disclosed in this annual report, no equity-linked agreements were entered into by the Group during the year or subsisted at the end of the year.

股份優先購買權

本公司之細則或百慕達法例對股份優先購買權並無規定。

Pre-emptive Rights

There are no provisions for pre-emptive rights under the Company's Bye-laws or the laws of Bermuda.

購買、出售或贖回本公司之上市證券

於年內，本公司或其任何附屬公司概無購買、出售或贖回本公司之任何上市證券。

Purchase, Sale or Redemption of Listed Securities of the Company

Neither the Company nor any of its subsidiaries purchased, sold or redeemed any of the listed securities of the Company during the year.

可供分派儲備

按百慕達一九八一年公司法(經修訂)計算，於二零二三年三月三十一日，本公司可供分派之儲備為港幣110,164,000元，當中港幣46,029,000元已建議作為本年度之末期股息。

Distributable Reserves

As at 31 March 2023, the Company's reserves available for distribution, calculated in accordance with the Companies Act 1981 of Bermuda (as amended), amounted to HK$110,164,000, of which HK$46,029,000 has been proposed as the final dividend for the year.

慈善捐款

於年內，本集團之慈善捐款為港幣122,000元(二零二二年：港幣2,811,000元)。

Charitable Contributions

During the year, the Group made charitable contributions totalling HK$122,000 (2022: HK$2,811,000).

主要客戶及供應商

於年內，本集團之最大五名客戶總計之營業額佔本集團之總收益不足30%，而本集團之單一最大客戶之營業額佔本集團之總收益約15%。

於年內，本集團之最大五名供應商總計之採購額佔本集團之總採購額不足30%。

概無董事、任何彼等的緊密聯繫人或任何股東（據董事所知擁有5%以上的本公司已發行股份數目）擁有本集團之最大五名客戶或供應商的任何權益。

Major Customers and Suppliers

Sales to the five largest customers of the Group accounted for less than 30% of the Group's total revenue for the year and sales to the single largest customer of the Group accounted for approximately 15% of the Group's total revenue for the year.

Purchases from the five largest suppliers of the Group accounted for less than 30% of the Group's total purchases for the year.

None of the directors or any of their close associates or any shareholders (which, to the knowledge of the directors, own more than 5% of the number of issued shares of the Company) had any interest in the Group's five largest customers or suppliers.

主要風險及不明朗因素

下表闡述集團數項主要風險以及目前因應管理或減輕風險而採取的風險管理／控制活動：

Principal Risks and Uncertainties

The following table illustrates the current risk management/control activities that are in place to manage or mitigate the major risks of the Group:

風險類別 Risk Category	風險描述 Risk Description	風險緩解措施 Mitigation controls to the risk
宏觀經濟因素 Macro-Economic Factors	• 經濟衰退等不利的宏觀經濟狀況可能對公司發展和產品供需產生不利影響，從而可能導致影響公司的盈利能力。 Unfavourable macro-economic condition, such as economic recession, may have a detrimental impact on Company development and products supply and demand which may in result affect the profitability of the Company.	• 以本集團強大的研發能力為支撐，推出新產品或升級產品以應對市場需求。 Introduce new or upgraded products to cope with the market demand, which are supported by the Group's strong research and development capabilities. • 重組集團架構，以有效應對外圍環境的變化。 Reorganize the Group's structure in order to effectively respond to the change in external environment. • 建立鼓勵員工以結果為導向的工作環境，並容許員工在授權範圍內靈活地處理工作。 Establish an environment that encourages the staff to apply result-oriented approach on their work, and allow the staff to have flexibility in processing their work within the authorization limit.

風險類別 Risk Category	風險描述 Risk Description	風險緩解措施 Mitigation controls to the risk
人力資源 Human Resources	• 難以在市場上招聘適合公司營運需求的人才，影響公司的正常經營。 Difficult to recruit suitable talents in the market to meet the Company's operational needs, which affects the Company's normal operations.	• 制定有競爭力的薪酬及福利待遇以吸引合適的人才並留住現有員工以滿足本集團的營運需求。 Establish competitive remuneration and fringe benefits packages to attract suitable talents as well as retaining the existing staff to meet the operational needs of the Group. • 為員工提供不同方面的內部和外部培訓。 Provide internal and external trainings to the staff on different aspects. • 與員工保持良好溝通，定期收集他們的反饋以了解員工的需求。 Maintain good communication with the staff and collect feedbacks from them regularly to understand their needs. • 定期組織團隊建立活動，以促進溝通，加強員工之間的聯繫。 Regularly organize team building activities to facilitate communications and strengthen bonding between staff. • 與離職員工舉行離職會議，了解並收集他們對公司的反饋。 Conduct exit meeting with resigned staff to understand and collect their feedbacks on the Company. • 定期透過外部招聘公司尋找合適人才以促進招聘流程。 Seek assistance from external recruiters to search suitable talents regularly for facilitating the recruitment processes.

風險類別 Risk Category	風險描述 Risk Description	風險緩解措施 Mitigation controls to the risk
新冠肺炎 COVID-19	• 新冠肺炎在中國和其他國家的持續傳播和長期發生可能對業務運營和盈利能力產生不利影響。 Continuing spread and prolonged occurrence of COVID-19 in the PRC and other countries may adversely affect the business operation and profitability.	• 成立跨部門應對小組並定期召開會議，以應對新冠肺炎發生帶來的影響。 Set up an inter-departmental response team and conduct regular meetings to cope with the impact brought by the occurrence of COVID-19. • 重組製造組織，採取積極措施以減少浪費，提高資源利用率，加強與供應商的關係 Restructure the manufacturing organization together with aggressive measures aimed at reducing wastage and improving resource utilization and strengthening the relationships with suppliers • 落實感染防控措施。 Implement infection prevention and control measures. • 成立監測小組，定期檢查，確保感染防控措施得到有效執行。 Set up a monitoring team to perform periodic inspection to ensure that infection prevention and control measures have been effectively executed.
原材料供應 Supply of Raw Materials	• 無法確保穩定的原材料和服務供應，可能影響公司及時向客戶交付產品的能力。 Unable to secure a stable supply of raw materials and services which may affect the Company's ability to deliver products to customers in a timely manner.	• 嚴格選擇優質供應商，本著互信原則與供應商保持良好的關係和溝通。 Strictly select high-quality suppliers and maintain good relationship and communications with suppliers based on the principle of mutual trust. • 與主要供應商建立戰略合作夥伴關係，以優先於其他買家訂購原材料。 Build strategic partnerships with the key suppliers so as to take priority in ordering the raw materials over other buyers.

風險類別 Risk Category	風險描述 Risk Description	風險緩解措施 Mitigation controls to the risk
原材料供應*(續)* Supply of Raw Materials *(Continued)*		• 對將至的銷售訂單和關鍵原材料的使用情況進行預測，以確保關鍵原材料的現有水平能夠支持將至的生產量並完成銷售訂單。 Prepare forecast on the upcoming sales orders and the usage of the key raw materials to ensure existing level of the key raw materials can support the upcoming production volume and fulfilling the sales orders. • 在原材料短缺的情況下，調整和重新安排生產計劃以優先生產緊急銷售訂單。 In circumstances where shortage of raw materials occurs, adjust and rearrange the production plan to prioritize the production of urgent sales orders. • 在不同地區尋找價格合理的替代供應商。 Search for alternative suppliers in different locations with reasonable price.
危機管理 Crisis Management	• 沒有任何機制及時應對公司的危機並提出相應的解決方案，導致危機發生時未能有效應對，影響公司經營，甚至造成損失。 Without any mechanism to respond to the Company's crisis in a timely manner and propose corresponding solution, resulting in failure to respond effectively when crisis occurs, which affects the Company's operations and even causes losses.	• 建立清晰的組織架構和通報路線以確保危機通報能夠及時開展。 Establish a clear organizational structure and reporting lines to ensure that reporting of crisis can be carried out in a timely manner. • 危機發生時，成立由相關部門負責人組成的應對小組以應對危機。 When crisis occurs, set up a response team consisting of relevant department heads to cope with the crisis.

管理合約

於年內並無訂立或存在有關本公司全部或任何重大部分業務的管理及行政之合約。

Management Contracts

No contracts concerning the management and administration of the whole or any substantial part of the business of the Company were entered into or existing during the year.

董事

於年內及截至本報告書日期，本公司之董事如下：

執行董事

蔣麗苑女士*(*主席兼集團總裁*)
鍾效良先生

獨立非執行董事

陳智思先生+*@#
Anish LALVANI先生+*@#
利子厚先生+*@#
陳慶光先生+*@#

+ *審核委員會成員*
* *薪酬委員會成員*
@ *提名委員會成員*
# *企業管治委員會成員*

本公司董事之個人資料載於本年報第23至26頁。本公司之高級管理人員同時為本公司執行董事。

於二零二三年六月二十六日(即本報告書日期)，許志偉先生獲委任為本公司的獨立非執行董事(亦分別為審核委員會及企業管治委員會成員)，有關委任自二零二三年七月一日起生效。

根據本公司之細則第109(A)條的規定，利子厚先生及陳慶光先生將於即將舉行之本公司股東周年大會上輪值退任；彼等均合資格並願意於即將舉行之股東周年大會上膺選連任。

此外，根據本公司之細則第100條的規定，新委任的獨立非執行董事許志偉先生(自二零二三年七月一日起生效)之任期將於即將舉行之本公司股東周年大會上屆滿；彼合資格並願意於即將舉行之股東周年大會上膺選連任。

Directors

The directors of the Company during the year and up to the date of this report were:

Executive Directors

Ms. Lai Yuen CHIANG* *(Chairman and Chief Executive Officer)*
Mr. Stephen Hau Leung CHUNG

Independent Non-executive Directors

Mr. Bernard Charnwut CHAN+*@#
Mr. Anish LALVANI+*@#
Mr. Michael Tze Hau LEE+*@#
Mr. Johnson Chin Kwang TAN+*@#

+ *Member of the Audit Committee*
* *Member of the Remuneration Committee*
@ *Member of the Nomination Committee*
# *Member of the Corporate Governance Committee*

The biographical details of the directors of the Company are set out on pages 23 to 26 of this annual report. The senior management of the Company is also executive directors of the Company.

Mr. Harry Chi HUI has been appointed as an independent non-executive director (also a member of each of the Audit Committee and the Corporate Governance Committee) of the Company on 26 June 2023 (being the date of this report) and the appointment is effective from 1 July 2023.

In accordance with Bye-law 109(A) of the Company's Bye-laws, Mr. Michael Tze Hau LEE and Mr. Johnson Chin Kwang TAN will retire by rotation at the forthcoming annual general meeting of the Company and, being eligible, have offered themselves for re-election at the forthcoming annual general meeting.

In addition, according to Bye-law 100 of the Company's Bye-laws, Mr. Harry Chi HUI, being an independent non-executive director newly appointed with effect from 1 July 2023, will hold office until the forthcoming annual general meeting of the Company and, being eligible, has offered himself for re-election at the forthcoming annual general meeting.

本公司已收到各獨立非執行董事就其依據上市規則第3.13條而作出有關獨立性的年度確認函，並仍然認為彼等仍屬獨立人士。

本公司亦已收到許志偉先生於其委任的生效日期前就根據上市規則第3.13條而作出有關獨立性的書面確認函，並認為彼屬獨立人士。

The Company has received from each independent non-executive director an annual confirmation of his independence pursuant to Rule 3.13 of the Listing Rules and still considers them to be independent.

The Company has also received from Mr. Harry Chi HUI his written confirmation of independence before the effective date of his appointment pursuant to Rule 3.13 of the Listing Rules and considers him to be independent.

董事資料之變更

根據上市規則第13.51B(1)條，自本公司上一次中期報告刊發後須予披露之董事資料變更如下：

(1) 蔣麗苑女士自二零二三年一月一日起終止擔任恒生銀行有限公司(於聯交所上市)之獨立非執行董事。

(2) 陳智思先生自二零二三年三月起終止擔任中華人民共和國全國人民代表大會之代表。

除上文披露者及載於財務報表附註9之董事薪酬外，概無根據上市規則第13.51B(1)條須予披露的其他資料。

Changes in Directors' Information

The changes in the information of the directors, which are required to be disclosed pursuant to Rule 13.51B(1) of the Listing Rules, since the publication of the Company's last interim report are set out below:

(1) Ms. Lai Yuen CHIANG ceased to be an independent non-executive director of Hang Seng Bank Limited (listed on the Stock Exchange) with effect from 1 January 2023.

(2) Mr. Bernard Charnwut CHAN ceased to be a Deputy to the National People's Congress of the People's Republic of China since March 2023.

Save as disclosed above and the Directors' emoluments which set out in note 9 to the financial statements, there is no other information which is required to be disclosed under Rule 13.51B(1) of the Listing Rules.

董事服務合約

擬於即將舉行之本公司股東周年大會上重選連任之董事，概無與本公司訂立本公司在一年內不可在不予賠償(法定賠償除外)之情況下可予以終止之服務合約。

Directors' Service Contracts

None of the directors proposed for re-election at the forthcoming annual general meeting of the Company has a service contract with the Company which is not determinable by the Company within one year without payment of compensation, other than statutory compensation.

董事薪酬

年內董事薪酬詳情載於財務報表附註9。

Directors' Emoluments

Details of Directors' emoluments for the year are set out in note 9 to the financial statements.

董事於交易、安排或合約中之重大權益

除本年報所披露者外，本公司、或其任何控股公司、附屬公司或同集團附屬公司並無訂立涉及本集團業務而本公司董事或與本公司董事有關連的實體直接或間接擁有重大權益的重要交易、安排或合約(於本年度終結時或於年內任何時間仍然生效)。

Directors' Material Interests in Transactions, Arrangements or Contracts

Save as disclosed in this annual report, no transactions, arrangements or contracts of significance in relation to the business of the Group to which the Company, or any of its holding companies, subsidiaries or fellow subsidiaries was a party, and in which a director of the Company or an entity connected with a director of the Company had a material interest, whether directly or indirectly, subsisted at the end of the year or at any time during the year.

獲准許的彌償條文

惠及本公司董事之獲准許的彌償條文現正有效，且於年內及本報告書批准時一直生效。於截至二零二三年三月三十一日止之財政年度內，本公司亦已為本公司之董事及其附屬公司之董事購買董事及行政人員責任保險，以為其在依法履行職務過程中可能產生的賠償提供保障。

Permitted Indemnity Provision

A permitted indemnity provision for the benefit of the directors of the Company is currently in force and was in force during the year and at the time of approval of this report. The Company has also purchased the directors' and officers' liability insurance to provide adequate protection against claims arising from the lawful discharge of duties by the directors of the Company and its subsidiaries throughout the financial year ended 31 March 2023.

董事於股份、相關股份及債券之權益及淡倉

於二零二三年三月三十一日，本公司之已發行普通股數目為630,531,600股；本公司董事及最高行政人員於本公司或其任何相聯法團(定義見證券及期貨條例(「證券及期貨條例」)第XV部)之股份、相關股份及債券中持有根據證券及期貨條例第352條須登記於本公司所備存的登記冊內之權益及淡倉，或根據上市規則附錄十上市發行人董事進行證券交易的標準守則(「標準守則」)而須另行知會本公司及聯交所之權益及淡倉如下：

Directors' Interests and Short Positions in Shares, Underlying Shares and Debentures

As at 31 March 2023, the number of issued ordinary shares of the Company was 630,531,600; and the interests and short positions of the directors and chief executive of the Company in the shares, underlying shares and debentures of the Company or any associated corporation (within the meaning of Part XV of the Securities and Futures Ordinance (the "SFO")), as recorded in the register of the Company required to be kept under Section 352 of the SFO, or as otherwise notified to the Company and the Stock Exchange pursuant to the Model Code for Securities Transactions by Directors of Listed Issuers (the "Model Code") as set out in Appendix 10 to the Listing Rules were as follows:

(a) 於本公司股份及相關股份之好倉

(a) Long positions in shares and underlying shares of the Company

董事姓名 Name of director	身份 Capacity	於普通股／相關股份*之權益 Interest in ordinary shares/ underlying shares*	附註 Notes	佔本公司已發行普通股之概約百分比 Approximate percentage of the Company's issued ordinary shares
蔣麗苑 Lai Yuen CHIANG	實益擁有人 Beneficial owner	9,100,000	(i)	1.44%
	其他 Other	399,641,620	(2)	63.38%
鍾效良 Stephen Hau Leung CHUNG	實益擁有人 Beneficial owner	2,466,000	(ii)	0.39%
陳慶光 Johnson Chin Kwang TAN	實益擁有人 Beneficial owner	484,000	–	0.08%
Anish LALVANI	其他 Other	652,000	(iii)	0.10%

附註：

(i) 於該等權益中，4,100,000為本公司授予董事(作為實益擁有人)之購股權。

(ii) 於該等權益中，1,800,000為本公司授予董事(作為實益擁有人)之購股權。

(iii) 該等股份權益乃以全權信託的全權受益人身份持有。

* 有關董事於本公司授出之購股權的相關股份權益之詳情載於下文「購股權」一節。

Notes:

(i) Among these interests, 4,100,000 were share options granted by the Company to the director as beneficial owner.

(ii) Among these interests, 1,800,000 were share options granted by the Company to the director as beneficial owner.

(iii) These interests in shares were held in the capacity as discretionary beneficiary of a discretionary trust.

* Details of the interests of the directors in the underlying shares in respect of the share options granted by the Company are set out in the section headed "Share Options" below.

(b) 於相聯法團股份之好倉

(i) 於震雄投資有限公司(「震雄投資」)之普通股權益：

(b) Long positions in shares of associated corporations

(i) Interests in ordinary shares of Chen Hsong Investments Limited ("CH Investments"):

董事姓名 Name of director	身份 Capacity	於普通股之權益 Interest in ordinary shares	附註 Notes	佔震雄投資已發行普通股股份之概約百分比 Approximate percentage of the issued ordinary shares of CH Investments
蔣麗苑 Lai Yuen CHIANG	其他 Other	58,220,300	(2)	100.00%

(ii) 本公司之董事蔣麗苑女士被視作持有下列相聯法團的股份之權益：

(ii) Ms. Lai Yuen CHIANG, a director of the Company, is deemed to be interested in the shares of the following associated corporations:

相聯法團名稱 Name of associated corporation	於股份之權益 Interest in shares	附註 Notes	佔相聯法團有關類別已發行股份之概約百分比 Approximate percentage of the relevant class of issued shares of associated corporation
Assetwise Holdings Limited	1股普通股 1 ordinary share	(1), (3)	100.00%
震雄(中國)投資有限公司 Chen Hsong (PRC) Investment Company Limited	2股無投票權遞延股份 2 non-voting deferred shares	(1), (3)	100.00%
震雄機器廠有限公司 Chen Hsong Machinery Company, Limited	50,000,000股無投票權遞延股份 50,000,000 non-voting deferred shares	(1), (3)	100.00%
Chiangs' Industrial Holdings Limited	1股可贖回股份 1 redeemable share	(1)	100.00%
CHI Dorset Square Limited	4,264,675股普通股 4,264,675 ordinary shares	(1), (6)	100.00%
連凱有限公司 Continuous Victory Limited	1股普通股 1 ordinary share	(1), (3)	100.00%

相聯法團名稱 Name of associated corporation	於股份之權益 Interest in shares	附註 Notes	佔相聯法團有關類別已發行股份之概約百分比 Approximate percentage of the relevant class of issued shares of associated corporation
迪斯有限公司 Desee Limited	2股普通股 2 ordinary shares	(1), (4)	100.00%
達觀有限公司 Desko Limited	2股普通股 2 ordinary shares	(1), (4)	100.00%
雅都發展有限公司 Elegant City Developments Limited	1股普通股 1 ordinary share	(1), (3)	100.00%
Elite Sino Investments Limited	2股普通股 2 ordinary shares	(1), (3)	100.00%
博冠投資有限公司 Equaltex Investment Limited	2股普通股 2 ordinary shares	(1), (3)	100.00%
高文有限公司 Goman Limited	2股普通股 2 ordinary shares	(1), (4)	100.00%
Gondmyne Limited	100,000股普通股 100,000 ordinary shares	(1), (3)	100.00%
Granwich Limited	1股普通股 1 ordinary share	(1), (3)	100.00%
香港電腦輔助設計及生產服務有限公司 Hong Kong Cad-Cam Services Limited	52,570,000股普通股 52,570,000 ordinary shares	(1), (3)	75.10%
Kadom Limited	2股普通股 2 ordinary shares	(1), (3)	100.00%
佳事來投資有限公司 KCI Investments Limited	1股普通股 1 ordinary share	(1), (5)	100.00%
高祐有限公司 Koyoki Limited	2股普通股 2 ordinary shares	(1), (4)	100.00%

相聯法團名稱 Name of associated corporation	於股份之權益 Interest in shares	附註 Notes	佔相聯法團有關類別已發行股份之概約百分比 Approximate percentage of the relevant class of issued shares of associated corporation
美姬有限公司 Mikia Limited	2股普通股 2 ordinary shares	(1), (4)	100.00%
慕珍有限公司 Mogin Limited	2股普通股 2 ordinary shares	(1), (4)	100.00%
Pacific Concept Global Limited	6股普通股 6 ordinary shares	(1), (3)	60.00%
派諾有限公司 Parot Limited	2股普通股 2 ordinary shares	(1), (4)	100.00%
Perfect Choice Global Limited	1股普通股 1 ordinary share	(1), (3)	100.00%
寶達仕有限公司 Potachi Limited	2股普通股 2 ordinary shares	(1), (4)	100.00%
Pro-Team Pacific Limited	1股普通股 1 ordinary share	(1), (3)	100.00%
利勤有限公司 Rikon Limited	2股普通股 2 ordinary shares	(1), (4)	100.00%
仲都有限公司 Semicity Limited	2股普通股 2 ordinary shares	(1), (4)	100.00%
西北有限公司 Sibeland Limited	2股普通股 2 ordinary shares	(1), (4)	100.00%
崇美有限公司 Sumei Limited	2股普通股 2 ordinary shares	(1), (4)	100.00%
益創集團有限公司 Value Creation Group Limited	1股普通股 1 ordinary share	(1), (3)	100.00%

附註：

(1) Chiangs' Industrial Holdings Limited持有震雄投資100%權益，Chiangs' Industrial Holdings Limited則由Cititrust (Bahamas) Limited全資擁有。Cititrust (Bahamas) Limited為蔣震工業慈善基金(「慈善基金」)之全權信託之信託人。根據證券及期貨條例，由於蔣麗苑女士實益擁有Proficient City Investments Limited之100%股份，該公司為慈善基金之幾位合資格受益人之其中一位，故被視作於有關股份持有權益。

(2) 此乃Cititrust (Bahamas) Limited間接持有之權益，而Cititrust (Bahamas) Limited為慈善基金之信託人，而慈善基金間接持有震雄投資100%權益。根據證券及期貨條例，由於蔣麗苑女士實益擁有Proficient City Investments Limited之100%股份，該公司為慈善基金之幾位合資格受益人之其中一位，故被視作於有關股份持有權益。

(3) 該等權益由震雄投資持有。

(4) 該等權益由震雄投資透過Gondmyne Limited間接持有。

(5) 該等權益由震雄投資透過Assetwise Holdings Limited間接持有。

(6) 該等權益由震雄投資透過Perfect Choice Global Limited間接持有。

除上文所披露者外，於二零二三年三月三十一日，本公司董事或最高行政人員概無於本公司或其任何相聯法團(定義見證券及期貨條例第XV部)之股份、相關股份或債券中擁有根據證券及期貨條例第352條須登記於本公司所備存的登記冊內之任何權益或淡倉，或根據標準守則而須另行知會本公司及聯交所之權益或淡倉。

Notes:

(1) Chiangs' Industrial Holdings Limited holds 100% interest in CH Investments. In turn, Chiangs' Industrial Holdings Limited is wholly-owned by Cititrust (Bahamas) Limited. Cititrust (Bahamas) Limited is the trustee of a discretionary trust, namely The Chiang Chen Industrial Charity Foundation (the "Charity Foundation"). By virtue of the SFO, Ms. Lai Yuen CHIANG is deemed to be interested in the relevant shares as she beneficially owns 100% shares in Proficient City Investments Limited, one of the several eligible beneficiaries of the Charity Foundation.

(2) This represents the interest indirectly held by Cititrust (Bahamas) Limited, the trustee of the Charity Foundation, which holds 100% indirect interest in CH Investments. By virtue of the SFO, Ms. Lai Yuen CHIANG is deemed to be interested in the relevant shares as she beneficially owns 100% shares in Proficient City Investments Limited, one of the several eligible beneficiaries of the Charity Foundation.

(3) Such interests are held by CH Investments.

(4) Such interests are indirectly held by CH Investments through Gondmyne Limited.

(5) Such interests are indirectly held by CH Investments through Assetwise Holdings Limited.

(6) Such interests are indirectly held by CH Investments through Perfect Choice Global Limited.

Save as disclosed above, as at 31 March 2023, none of the directors or chief executive of the Company had any interests or short positions in the shares, underlying shares or debentures of the Company or any associated corporation (within the meaning of Part XV of the SFO) as recorded in the register of the Company required to be kept under Section 352 of the SFO or as otherwise notified to the Company and the Stock Exchange pursuant to the Model Code.

購股權

本公司之購股權計劃(「購股權計劃」)摘要載於財務報表附註32。

於年內根據購股權計劃本公司董事(其中一名亦為主要股東)及本集團選定僱員持有的購股權的變動及於二零二三年三月三十一日尚未行使的購股權的詳情如下：

Share Options

A summary of the share option scheme of the Company (the "Share Option Scheme") is set out in note 32 to the financial statements.

Details of the movements in the share options held by the directors (one of whom is also a substantial shareholder) of the Company and the selected employees of the Group under the Share Option Scheme during the year and outstanding as at 31 March 2023 were as follows:

		購股權數量 Number of share options								
參與人姓名或類別 Name or category of participant	授出日期 Date of grant	於二零二二年四月一日 As at 1 April 2022	授出 Granted	已行使 Exercised	註銷 Cancelled	失效 Lapsed	於二零二三年三月三十一日 As at 31 March 2023	行使期 Exercise period	(附註(3)) (Note (3))	行使價每股(港幣) Exercise price per share (HK$)
第一類										
Category I										
董事										
Directors										
蔣麗苑(附註(4))	27/11/2020	2,200,000	–	–	–	–	2,200,000	27/11/2022 – 26/11/2030	(3)(i)	2.20
Lai Yuen CHIANG (Note (4))	21/01/2022	1,900,000	–	–	–	–	1,900,000	21/01/2024 – 20/01/2032	(3)(i)	2.49
鍾效良	27/11/2020	1,200,000	–	–	–	–	1,200,000	27/11/2022 – 26/11/2030	(3)(i)	2.20
Stephen Hau Leung CHUNG	21/01/2022	600,000	–	–	–	–	600,000	21/01/2024 – 20/01/2032	(3)(i)	2.49
第二類										
Category II										
選定僱員*(總計)*	27/11/2020	4,100,000	–	–	–	(1,380,000)	2,720,000	27/11/2022 – 26/11/2030	(3)(ii)	2.20
Selected employees *(in aggregate)*	21/01/2022	1,430,000	–	–	–	(160,000)	1,270,000	21/01/2024 – 20/01/2032	(3)(ii)	2.49
第三類										
Category III										
選定僱員*(總計)*	27/11/2020	2,950,000	–	–	–	(330,000)	2,620,000	27/11/2023 – 26/11/2030	(3)(iii)	2.20
Selected employees *(in aggregate)*	21/01/2022	1,840,000	–	–	–	(260,000)	1,580,000	21/01/2025 – 20/01/2032	(3)(iii)	2.49
合計										
Total		16,220,000	–	–	–	(2,130,000)	14,090,000			

參與人姓名或類別 Name or category of participant	授出日期 Date of grant	購股權數量 Number of share options 於二零二二年四月一日 As at 1 April 2022	授出 Granted	已行使 Exercised	註銷 Cancelled	失效 Lapsed	於二零二三年三月三十一日 As at 31 March 2023	行使期 Exercise period	(附註(3)) (Note (3))	行使價每股(港幣) Exercise price per share (HK$)
年內獲最高薪酬之五名人士 Five highest paid individuals during the year										
第一類 Category I										
董事 Directors										
蔣麗苑(附註(4))	27/11/2020	2,200,000	–	–	–	–	2,200,000	27/11/2022 – 26/11/2030	(3)(i)	2.20
Lai Yuen CHIANG (Note (4))	21/01/2022	1,900,000	–	–	–	–	1,900,000	21/01/2024 – 20/01/2032	(3)(i)	2.49
鍾效良	27/11/2020	1,200,000	–	–	–	–	1,200,000	27/11/2022 – 26/11/2030	(3)(i)	2.20
Stephen Hau Leung CHUNG	21/01/2022	600,000	–	–	–	–	600,000	21/01/2024 – 20/01/2032	(3)(i)	2.49
第二類 Category II										
選定僱員*(總計)* Selected employees *(in aggregate)*	27/11/2020	600,000	–	–	–	–	600,000	27/11/2022 – 26/11/2030	(3)(ii)	2.20
	21/01/2022	500,000	–	–	–	–	500,000	21/01/2024 – 20/01/2032	(3)(ii)	2.49
第三類 Category III										
選定僱員*(總計)* Selected employees *(in aggregate)*	27/11/2020	650,000	–	–	–	–	650,000	27/11/2023 – 26/11/2030	(3)(iii)	2.20
	21/01/2022	–	–	–	–	–	–	21/01/2025 – 20/01/2032	(3)(iii)	2.49
合計 Total		7,650,000	–	–	–	–	7,650,000			

附註：

(1) 所有上述購股權之授出均於上市規則第十七章的修訂於二零二三年一月一日生效前作出。

(2) 概無向任何參與人授出之購股權超逾1%的個人限額。

Notes:

(1) All of the above grants of share options were made prior to the amendments to Chapter 17 of the Listing Rules taking effect on 1 January 2023.

(2) None of the grants of share options to any participant is in excess of the 1% individual limit.

(3) 購股權的歸屬期自授出日期開始至相關行使期開始時結束：

(i) 就第一類而言，向各承授人授出之50%及50%購股權分別於授出日期第二周年及第四周年當日起歸屬並可行使，惟概無購股權可於授出日期起計滿十年後行使。

(ii) 就第二類而言，向各承授人授出之30%、30%及40%購股權分別於授出日期第二周年、第四周年及第六周年當日起歸屬並可行使，惟概無購股權可於授出日期起計滿十年後行使。第二類所涉及購股權之歸屬須經本公司董事局主席同意。

(iii) 就第三類而言，向各承授人授出之30%、30%及40%購股權分別於授出日期第三周年、第五周年及第七周年當日起歸屬並可行使，惟概無購股權可於授出日期起計滿十年後行使。第三類所涉及購股權之歸屬須經本公司董事局主席同意。

購股權的歸屬不受任何表現目標及／或回補機制的約束。

(4) 根據證券及期貨條例，蔣麗苑女士(本公司主席、執行董事兼集團總裁)由於實益擁有慈善基金之幾位合資格受益人其中一位之100%股份，而該慈善基金之信託人間接持有震雄投資(該公司持有399,641,620股股份，佔本公司於本報告書日期已發行股份之63.38%)之100%權益，因此彼亦被視為擁有震雄投資所持有本公司股份之權益。

(5) 於截至二零二三年三月三十一日止年度概無根據購股權計劃購股權獲授出、已行使或被註銷。

(6) 購股權計劃中可予發行之股份總數為59,493,160(佔本公司於本年報日期已發行股份數目之9.44%)，包括尚未行使之14,090,000購股權及本公司可授出之45,403,160購股權。於二零二二年四月一日及二零二三年三月三十一日，根據購股權計劃可授出45,403,160購股權。購股權計劃並無設立服務提供者分項限額。

(3) The vesting period of the share options is from the date of grant until the commencement of the relevant exercise period:

(i) in respect of Category I, as to 50% and 50% of the share options granted to each grantee shall be vested on and are exercisable from the date falling on the second and fourth anniversary from the date of grant respectively provided that no share options shall be exercised after ten years from the date of grant.

(ii) in respect of Category II, as to 30%, 30% and 40% of the share options granted to each grantee shall be vested on and are exercisable from the date falling on the second, fourth and sixth anniversary from the date of grant respectively provided that no share options shall be exercised after ten years from the date of grant. Vesting of the share options in respect of Category II is subject to the consent of the Chairman of the board of directors of the Company.

(iii) in respect of Category III, as to 30%, 30% and 40% of the share options granted to each grantee shall be vested on and are exercisable from the date falling on the third, fifth and seventh anniversary from the date of grant respectively provided that no share options shall be exercised after ten years from the date of grant. Vesting of the share options in respect of Category III is subject to the consent of the Chairman of the board of directors of the Company.

The vesting of the share options is not subject to any performance target and/or clawback mechanism.

(4) By virtue of the SFO, Ms. Lai Yuen CHIANG (the Chairman, an executive director and the Chief Executive Officer of the Company) is also deemed to be interested in the shares of the Company held by CH Investments, a company holding 399,641,620 shares, representing 63.38% of the issued shares of the Company as at the date of this report, as she beneficially owns 100% shares in one of the several eligible beneficiaries of the Charity Foundation, where the trustee thereof indirectly holds 100% interest in CH Investments.

(5) No share options were granted, exercised or cancelled under the Share Option Scheme during the year ended 31 March 2023.

(6) The total number of shares available for issue under the Share Option Scheme were 59,493,160, representing 9.44% of the number of issued shares of the Company as at the date of this annual report, which includes 14,090,000 outstanding share options and 45,403,160 share options available for grant by the Company. As at 1 April 2022 and 31 March 2023, 45,403,160 share options were available for grant under the Share Option Scheme. There was no service provider sublimit set under the Share Option Scheme.

董事購買股份或債券之權利

除於上文「購股權」一節及財務報表附註32所披露外，本公司或其任何附屬公司於年內並無訂立任何安排，致使本公司董事可藉購買本公司或任何其他法人團體之股份或債券而獲益，而董事、最高行政人員或彼等之配偶或未滿十八歲之子女於年內概無擁有可認購本公司證券之任何權利，亦無行使任何該等權利。

Directors' Rights to Acquire Shares or Debentures

Save as disclosed under the section headed "Share Options" above and in note 32 to the financial statements, at no time during the year was the Company or any of its subsidiaries a party to any arrangements to enable the directors of the Company to acquire benefits by means of the acquisitions of shares in, or debentures of, the Company or any other body corporate, and none of the directors, chief executive or their spouses or children under the age of 18, had any right to subscribe for securities of the Company, or had exercised any such right during the year.

董事於競爭業務之權益

於二零二三年三月三十一日，概無執行董事於直接或間接與本集團業務構成競爭或可能構成競爭的業務擁有任何權益。

Directors' Interests in Competing Business

As at 31 March 2023, none of the executive directors had any interest in a business, which competes or is likely to compete, either directly or indirectly, with the business of the Group.

主要股東及其他人士於股份及相關股份之權益及淡倉

於二零二三年三月三十一日，就本公司董事及最高行政人員所知，根據證券及期貨條例第336條須備存的本公司登記冊所記錄之主要股東及其他人士於本公司之股份及相關股份之權益或淡倉如下：

Substantial Shareholders' and Other Persons' Interests and Short Positions in Shares and Underlying Shares

As at 31 March 2023, so far as was known to the directors and chief executive of the Company, the interests or short positions of substantial shareholders and other persons in the shares and underlying shares of the Company as recorded in the register of the Company required to be kept under Section 336 of the SFO were as follows:

於本公司股份及相關股份之好倉 **Long positions in shares and underlying shares of the Company**

股東名稱／姓名 Name of shareholder	身份 Capacity	普通股／相關股份*股數 Number of ordinary shares/ underlying shares*	附註 Notes	佔本公司已發行普通股之概約百分比 Approximate percentage of the Company's issued ordinary shares
震雄投資 CH Investments	實益擁有人 Beneficial owner	399,641,620	(1)	63.38%
Chiangs' Industrial Holdings Limited	於受控制法團之權益 Interest of controlled corporation	399,641,620	(1)	63.38%
Cititrust (Bahamas) Limited	信託人 Trustee	399,641,620	(1)	63.38%
蔣麗苑 Lai Yuen CHIANG	實益擁有人 Beneficial owner	9,100,000	(2)	1.44%
	其他 Other	399,641,620	(3)	63.38%
Proficient City Investments Limited	於受控制法團之權益 Interest of controlled corporation	399,641,620	(3)	63.38%
David Michael WEBB	實益擁有人 Beneficial owner	15,147,200	–	2.40%
	於受控制法團之權益 Interest of controlled corporation	22,746,800	(4)	3.61%

附註：

(1) 此乃震雄投資所持有之同一批股份。由於Cititrust (Bahamas) Limited為慈善基金之信託人，故被視作於有關股份持有權益，而該等有關股份乃透過其所控制之法團Chiangs' Industrial Holdings Limited在震雄投資持有100%權益而持有。

(2) 於該等權益中，4,100,000為本公司授予董事(作為實益擁有人)之購股權。

(3) 此乃震雄投資所持之同一批股份。由於Proficient City Investments Limited為慈善基金之幾位合資格受益人之其中一位，故被視作於有關股份持有權益，而蔣麗苑女士為本公司之董事，為Proficient City Investments Limited唯一實益股東。

(4) 根據David Michael WEBB先生於二零二一年六月一日呈交之權益披露通知，該等股份權益由Preferable Situation Assets Limited持有，該公司由David Michael WEBB先生100%控制。

* 有關董事於本公司授出之購股權的相關股份權益之詳情載於上文「購股權」一節。

除上文所披露者外，於二零二三年三月三十一日，概無任何其他人士擁有本公司之股份或相關股份之權益或淡倉而須記錄於根據證券及期貨條例第336條本公司所備存之登記冊內。

關連交易

於年內，本集團訂立下列關連交易，若干詳情於遵照上市規則第14A章之規定予以披露：

Notes:

(1) This represents the same parcel of shares held by CH Investments. Cititrust (Bahamas) Limited is deemed to have interest in the relevant shares by virtue of being the trustee of the Charity Foundation, and the relevant shares are held through its controlled corporation, Chiangs' Industrial Holdings Limited, which holds 100% interest in CH Investments.

(2) Among these interests, 4,100,000 were share options granted by the Company to the director as beneficial owner.

(3) This represents the same parcel of shares held by CH Investments. Proficient City Investments Limited is deemed to have interest in the relevant shares by virtue of being one of the several eligible beneficiaries of the Charity Foundation and Ms. Lai Yuen CHIANG, a director of the Company, is the sole beneficial shareholder of Proficient City Investments Limited.

(4) Based on the notice of disclosure of interests of Mr. David Michael WEBB filed on 1 June 2021, these interests in shares are held by Preferable Situation Assets Limited, a company 100% controlled by Mr. David Michael WEBB.

* Details of the interests of the directors in the underlying shares in respect of the share options granted by the Company are set out in the section headed "Share Options" above.

Save as disclosed above, as at 31 March 2023, no other persons were recorded in the register of the Company required to be kept under Section 336 of the SFO as having interests or short positions in the shares and underlying shares of the Company.

Connected Transaction

During the year, the Group entered into the following connected transaction, certain details of which are disclosed in compliance with the requirements of Chapter 14A of the Listing Rules:

於二零二三年二月二十日，租客(「租客」)卓青創業資本有限公司(本公司之間接全資附屬公司)接受業主(「業主」)達觀有限公司(震雄投資之間接全資附屬公司)於二零二三年二月一日發出之租賃要約(「租賃要約」)，內容有關租賃位於香港威非路道18號萬國寶通中心20樓2001室之處所(「該處所」)，為期五年，自二零二三年三月一日起始至二零二八年二月二十九日屆滿，可按租客之選擇權續租額外兩年期。訂立租賃要約之目的為本集團擬使用該處所作為其辦事處及用於業務用途。根據租賃要約，(i)該處所之租金為每曆月港幣217,000元，不包括管理及空調費(將由業主代收並支付予管理該建築物之物業管理公司)、差餉及所有其他支出；及(ii)租客或其授權代表須支付保證金港幣810,887.31元(相當於三個月租金、管理及空調費及一季度差餉的總和)。

On 20 February 2023, Eminent Youth Ventures Capital Limited, an indirect wholly-owned subsidiary of the Company, as the tenant (the "Tenant") accepted an offer to lease (the "Offer to Lease") issued on 1 February 2023 by Desko Limited, an indirect wholly-owned subsidiary of CH Investments, as the landlord (the "Landlord") in relation to the lease of the premises located at Unit 2001, 20th Floor, Citicorp Centre, 18 Whitfield Road, Hong Kong (the "Premises") for a term of five years commenced from 1 March 2023 and expiring on 29 February 2028, subject to the Tenant's option to renew for a further term of two years. The purpose of the entering into of the Offer to Lease was that the Group intended to use the Premises as its offices and for business purposes. Pursuant to the Offer to Lease, (i) the rent for the Premises was HK$217,000 per calendar month, exclusive of management and air-conditioning charges (which shall be collected by the Landlord and paid over to the property management company which managed the building), government rates and all other outgoings; and (ii) a security deposit of HK$810,887.31 (equivalent to the sum of 3 months' rental, management and air-conditioning charges and a quarter of government rates) was payable by the Tenant or its authorized representative.

根據香港財務報告準則第16號「租賃」，作為租客訂立租賃要約將讓本集團於其綜合財務狀況表內須就有權使用該處所確認為使用權資產，而就上市規則而言，將被視為本集團收購資產。根據本公司日期為二零二三年二月二十日之公告，本集團根據租賃要約將予確認之使用權資產的價值約為港幣15,155,000元。

In accordance with HKFRS 16 "Leases", the entering into of the Offer to Lease as Tenant required the Group to recognize the right to use the Premises as a right-of-use asset on its consolidated statement of financial position which, for the purposes of the Listing Rules, was regarded as an acquisition of asset by the Group. The value of the right-of use asset recognized by the Group under the Offer to Lease amounts to approximately HK$15,155,000 according to the announcement of the Company dated 20 February 2023.

鑒於震雄投資為本公司之控股股東(定義見上市規則)，業主為震雄投資之間接全資附屬公司，故根據上市規則第14A章，業主被視為本公司之關連人士，訂立租賃要約構成本公司之關連交易。

Given that CH Investments is the controlling shareholder (as defined in the Listing Rules) of the Company, the Landlord, an indirect wholly-owned subsidiary of CH Investments, was regarded as a connected person of the Company under the Listing Rules and therefore the entering into of the Offer to Lease constituted a connected transaction of the Company under Chapter 14A of the Listing Rules.

根據上市規則第14A章，租賃要約項下的交易須遵守申報及公告規定，惟獲豁免遵守通函(包括獨立財務意見)及獨立股東批准之規定。有關交易之詳情載於本公司日期為二零二三年二月二十日之公告。

The transaction contemplated under the Offer to Lease is subject to the reporting and announcement requirements but is exempt from the circular (including independent financial advice) and independent shareholders' approval requirements pursuant to Chapter 14A of the Listing Rules. Details of the transaction are set out in the announcement of the Company dated 20 February 2023.

關連人士交易

本集團與根據適用之會計原則被視為「關連人士」之人士訂立若干交易載於財務報表附註36。該等關連人士交易構成上市規則項下之關連交易載於上文「關連交易」一節，本公司並已遵守上市規則第14A章項下之披露規定。

Related Party Transactions

The Group entered into certain transactions with parties regarded as "Related Parties" under applicable accounting principles are set out in note 36 to the financial statements. Those related party transaction(s) that constituted connected transaction(s) under the Listing Rules are set out in the section headed "Connected Transaction" above, and the Company for which the disclosure requirements in accordance with Chapter 14A of the Listing Rules had been met.

公眾持股量

根據本公司得悉而董事知悉的公開資料，本公司於年內及截至本報告書日期已按照上市規則規定維持多於本公司已發行股份之25%的足夠數額公眾持股量。

Public Float

Based on the information publicly available to the Company and within the knowledge of the directors, the Company has maintained the sufficient amount of public float of more than 25% of the Company's issued shares during the year and up to the date of this report as required under the Listing Rules.

薪酬政策

本集團之薪酬政策(包括釐定薪金及花紅)合符本公司及其附屬公司經營當地之一般慣例。本公司之薪酬委員會經考慮本集團之經營業績、個人職務和表現及可供比較之市場統計數據以及當時市場情況，檢討本公司董事包括執行董事(同時為本公司高級管理人員)之薪酬政策及架構。本公司之董事的薪酬政策乃由薪酬委員會檢討。

Emolument Policy

The Group's emolument policy, including the determination of salaries and bonuses, is in line with the local practices where the Company and its subsidiaries operate. The Remuneration Committee of the Company reviews the emolument policy and structure for the remuneration package for the directors of the Company (including executive directors who are also senior management of the Company), having regard to the Group's operating results, individual duties and performance and comparable market statistics as well as prevailing market conditions. The Remuneration Policy of the Directors of the Company is reviewed by the Remuneration Committee.

本公司已採納購股權計劃作為對本公司董事及本集團選定僱員的獎勵或激勵；有關計劃之詳情載於上文「購股權」一節及財務報表附註32。

The Company has adopted the Share Option Scheme as rewards or incentives to directors of the Company and selected employees of the Group, details of the scheme are set out in the section headed "Share Options" above and in note 32 to the financial statements.

企業管治

本公司的企業管治原則及常規載於本年報第27至56頁之企業管治報告書。

Corporate Governance

The Company's corporate governance principles and practices are set out in the Corporate Governance Report on pages 27 to 56 of this annual report.

核數師

本集團截至二零二三年三月三十一日止年度之財務報表已由安永會計師事務所審核，安永會計師事務所將任滿告退，並合資格及願意膺選連任。本公司將於即將舉行之本公司股東周年大會上提呈決議案，續聘安永會計師事務所為本公司之核數師。

Auditor

The financial statements of the Group for the year ended 31 March 2023 have been audited by Ernst & Young who retire and, being eligible, offer themselves for re-appointment. A resolution for re-appointment of Ernst & Young as auditor of the Company will be proposed at the forthcoming annual general meeting of the Company.

代表董事局

蔣麗苑
主席兼集團總裁

香港，二零二三年六月二十六日

On behalf of the Board

Lai Yuen CHIANG
Chairman and Chief Executive Officer

Hong Kong, 26 June 2023

獨立核數師報告書

Independent Auditor's Report

致：震雄集團有限公司列位股東
(於百慕達註冊成立之有限公司)

To the shareholders of Chen Hsong Holdings Limited
(Incorporated in Bermuda with limited liability)

意見

我們已審計列載於第90至223頁的震雄集團有限公司及其附屬公司(以下統稱「貴集團」)的綜合財務報表，此綜合財務報表包括於二零二三年三月三十一日的綜合財務狀況表與截至該日止年度的綜合收益表、綜合全面收益表、綜合權益變動表和綜合現金流量表，以及綜合財務報表附註，包括主要會計政策概要。

我們認為，該等綜合財務報表已根據香港會計師公會頒布的《香港財務報告準則》真實而中肯地反映了　貴集團於二零二三年三月三十一日的綜合財務狀況及截至該日止年度的綜合財務表現及綜合現金流量，並已遵照香港《公司條例》的披露規定妥為擬備。

OPINION

We have audited the consolidated financial statements of Chen Hsong Holdings Limited (the "Company") and its subsidiaries (the "Group") set out on pages 90 to 223, which comprise the consolidated statement of financial position as at 31 March 2023, and the consolidated income statement, the consolidated statement of comprehensive income, the consolidated statement of changes in equity and the consolidated statement of cash flows for the year then ended, and notes to the consolidated financial statements, including a summary of significant accounting policies.

In our opinion, the consolidated financial statements give a true and fair view of the consolidated financial position of the Group as at 31 March 2023, and of its consolidated financial performance and its consolidated cash flows for the year then ended in accordance with Hong Kong Financial Reporting Standards ("HKFRSs") issued by the Hong Kong Institute of Certified Public Accountants ("HKICPA") and have been properly prepared in compliance with the disclosure requirements of the Hong Kong Companies Ordinance.

意見的基礎

我們已根據香港會計師公會頒布的《香港審計準則》進行審計。我們在該等準則下承擔的責任已在本報告*「核數師就審計綜合財務報表承擔的責任」*部分中作進一步闡述。根據香港會計師公會頒布的*《專業會計師道德守則》*(以下簡稱「守則」)，我們獨立於　貴集團，並已履行守則中的其他專業道德責任。我們相信，我們所獲得的審計憑證能充足及適當地為我們的審計意見提供基礎。

BASIS FOR OPINION

We conducted our audit in accordance with Hong Kong Standards on Auditing ("HKSAs") issued by the HKICPA. Our responsibilities under those standards are further described in the *Auditor's responsibilities for the audit of the consolidated financial statements* section of our report. We are independent of the Group in accordance with the HKICPA's *Code of Ethics for Professional Accountants* (the "Code"), and we have fulfilled our other ethical responsibilities in accordance with the Code. We believe that the audit evidence we have obtained is sufficient and appropriate to provide a basis for our opinion.

致：震雄集團有限公司列位股東
(於百慕達註冊成立之有限公司)

To the shareholders of Chen Hsong Holdings Limited
(Incorporated in Bermuda with limited liability)

關鍵審計事項

關鍵審計事項是根據我們的專業判斷，認為對本期綜合財務報表的審計最為重要的事項。這些事項是在對綜合財務報表整體進行審計並形成意見的背景下進行處理的，我們不對這些事項提供單獨的意見。我們對下述每一事項在審計中是如何應對的描述也以此為背景。

我們已經履行了本報告「*核數師就審計綜合財務報表承擔的責任*」部分闡述的責任，包括與這些關鍵審計事項相關的責任。相應地，我們的審計工作包括執行為應對評估的綜合財務報表重大錯誤陳述風險而設計的審計程序。我們執行審計程序的結果，包括應對下述關鍵審計事項所執行的程序，為綜合財務報表整體發表審計意見提供了基礎。

KEY AUDIT MATTERS

Key audit matters are those matters that, in our professional judgement, were of most significance in our audit of the consolidated financial statements of the current period. These matters were addressed in the context of our audit of the consolidated financial statements as a whole, and in forming our opinion thereon, we do not provide a separate opinion on these matters. For each matter below, our description of how our audit addressed the matter is provided in that context.

We have fulfilled the responsibilities described in the *Auditor's responsibilities for the audit of the consolidated financial statements* section of our report, including in relation to these matters. Accordingly, our audit included the performance of procedures designed to respond to our assessment of the risks of material misstatement of the consolidated financial statements. The results of our audit procedures, including the procedures performed to address the matters below, provide the basis for our audit opinion on the accompanying consolidated financial statements.

致：震雄集團有限公司列位股東
(於百慕達註冊成立之有限公司)

To the shareholders of Chen Hsong Holdings Limited
(Incorporated in Bermuda with limited liability)

關鍵審計事項*(續)*

KEY AUDIT MATTERS *(continued)*

Key audit matter **關鍵審計事項**	**How our audit addressed the key audit matter** **該事項在審計中是如何應對的**
Impairment assessment of trade receivables *應收貿易賬款的減值評估*	
As at 31 March 2023, after netting off with an aggregate impairment provision of HK$92,297,000, the total net carrying amount of the Group's trade receivables was HK$1,025,099,000. Significant judgements and estimates are applied by management, based on the lifetime expected credit loss approach, in assessing whether the trade receivables are recoverable and if impairment provision is required. Management considers various factors, including the ageing of the trade receivables, historical collection patterns, existence of any disputes, trading history with each customer, prevailing and expected future market conditions and other available information concerning the creditworthiness of customers. Related disclosures about trade receivables are included in notes 4 and 21 to the consolidated financial statements. 於二零二三年三月三十一日， 貴集團的應收貿易賬款經扣除港幣92,297,000元的減值撥備後，總淨額為港幣1,025,099,000元。管理層按全期預期信貸虧損方式應用重大判斷及估計以評估應收貿易賬款是否可收回及減值撥備是否需計提。管理層考慮因素包括應收貿易賬款的賬齡、以往還款記錄、爭議存在性、跟各個別客戶的貿易記錄、現時及預期未來市場狀況及其他有關客戶信貸質素的資訊。 有關應收貿易賬款的披露事項，載於綜合財務報表附註4及21。	Our audit procedures included evaluating management's assessment methodology, and the inputs and assumptions applied by management in performing the impairment assessment by checking the ageing of trade receivables, the credit terms granted by the Group, historical collection patterns and post year-end settlements, of selected samples of customers. In addition, we assessed the published economic indices that management applied in their assessment of the impairment provision for trade receivables. 我們的審計程序包括評估管理層的評估方法，以及透過審閱選定的樣本客戶應收貿易賬款的賬齡、 貴集團給予之信貸期、過往還款記錄以及期末後的還款情況，以評估管理層在進行減值評估時投入的資料和假設。此外，我們評估管理層應用於評估應收貿易賬款減值撥備的已公布經濟指標。

致：震雄集團有限公司列位股東
(於百慕達註冊成立之有限公司)

To the shareholders of Chen Hsong Holdings Limited
(Incorporated in Bermuda with limited liability)

關鍵審計事項*(續)*

KEY AUDIT MATTERS *(continued)*

Key audit matter **關鍵審計事項**	**How our audit addressed the key audit matter** **該事項在審計中是如何應對的**
Assessment of inventory provision *存貨撥備的評估*	
As at 31 March 2023, the net carrying amount of the Group's inventories was HK$791,763,000. The assessment of inventory provision is based on the estimated net realisable value of inventories, which requires significant management judgement and estimates. Management considers various factors, including the ageing of the inventories, historical sales patterns, post year-end sales and selling prices of inventories, market demand, technological changes and the Group's future plan of usage or sale. Related disclosures about inventories are included in notes 4 and 20 to the consolidated financial statements. 於二零二三年三月三十一日， 貴集團的存貨淨額為港幣791,763,000元。存貨撥備的評估乃基於存貨的估計可變現淨值進行，並需管理層作出重大判斷及估計。管理層考慮因素包括存貨的貨齡、過往銷售記錄、期末後存貨銷售情況及售價、市場需求、技術變更以及 貴集團未來存貨的使用或銷售計劃。 有關存貨的披露事項，載於綜合財務報表附註4及20。	Our audit procedures included evaluating management's assessment methodology, and the inputs and assumptions applied by management in the assessment of the inventory provision by checking the ageing, the post year-end usage or sale and the selling prices, of selected samples of inventories, and assessing management's expected future demand and usage of inventories with reference to historical usage and/or sales patterns, and sales orders received by the Group. We also observed physical inventory counts at selected locations and checked the conditions of selected samples of inventories. 我們的審計程序包括評估管理層的評估方法，透過審閱選定的樣本存貨的貨齡、期末後的使用或銷售情況以及售價，參考以往使用和／或銷售之記錄及銷售訂單以評估管理層對未來存貨需求及使用的預測，以及評估管理層在進行存貨撥備評估時投入的資料和假設。我們亦於選定的地點觀察存貨實物盤點及檢查選定的樣本存貨的狀況。

致：震雄集團有限公司列位股東
(於百慕達註冊成立之有限公司)

To the shareholders of Chen Hsong Holdings Limited
(Incorporated in Bermuda with limited liability)

關鍵審計事項*(續)*

KEY AUDIT MATTERS *(continued)*

Key audit matter **關鍵審計事項**	**How our audit addressed the key audit matter** **該事項在審計中是如何應對的**
Impairment assessment of goodwill *商譽的減值評估*	
As at 31 March 2023, the net carrying amount of goodwill of the Group was HK$51,905,000. The Group performs an impairment test for goodwill acquired in business combinations on an annual basis. Management's impairment assessment of goodwill involves estimation of the value in use of the cash-generating unit to which the goodwill is allocated. The assessment process involves management's significant judgement and estimates, including the estimation of the expected future cash flows from the cash-generating unit and the use of other assumptions that are sensitive to expected future market or economic conditions and the cash-generating unit's performance in the foreseeable future, such as the discount rate and growth rate. Related disclosures about goodwill are included in notes 4 and 17 to the consolidated financial statements. 於二零二三年三月三十一日， 貴集團的商譽淨額為港幣51,905,000元。 貴集團就業務合併所得的商譽每年進行減值測試。管理層的商譽減值評估包括對已獲分配商譽之現金產生單位之使用價值作出估計。該評估需管理層作出重大判斷及估計，包括估計來自現金產生單位之預期未來現金流量，及採用對預期市場或經濟狀況以及對現金產生單位於可見未來的表現敏感之其他假設，如：折現率及增長率。 有關商譽的披露事項，載於綜合財務報表附註4及17。	Our audit procedures included evaluating management's methodologies and key assumptions used in the discounted cash flow projections, in particular those relating to the growth rate and discount rate with the assistance of our valuation experts, and evaluating management's assessment on the sensitivity analysis about the key assumptions and cash flow projections. 我們的審計程序包括評估管理層於已折現現金流量估算中所使用之方法及主要假設，並藉助我們的估值專家對增長率及折現率相關的假設進行評估，以及對管理層就主要假設及預期未來現金流量之敏感性評估進行評估。

致：震雄集團有限公司列位股東
(於百慕達註冊成立之有限公司)

To the shareholders of Chen Hsong Holdings Limited
(Incorporated in Bermuda with limited liability)

刊載於年度報告內其他信息

OTHER INFORMATION INCLUDED IN THE ANNUAL REPORT

貴公司董事須對其他信息負責。其他信息包括刊載於年度報告內的信息，但不包括綜合財務報表及我們的核數師報告書。

The directors of the Company are responsible for the other information. The other information comprises the information included in the Annual Report, other than the consolidated financial statements and our auditor's report thereon.

我們對綜合財務報表的意見並不涵蓋其他信息，我們亦不對該等其他信息發表任何形式的鑒證結論。

Our opinion on the consolidated financial statements does not cover the other information and we do not express any form of assurance conclusion thereon.

結合我們對綜合財務報表的審計，我們的責任是閱讀其他信息，在此過程中，考慮其他信息是否與綜合財務報表或我們在審計過程中所瞭解的情況存在重大抵觸或者似乎存在重大錯誤陳述的情況。基於我們已執行的工作，如果我們認為其他信息存在重大錯誤陳述，我們需要報告該事實。在這方面，我們沒有任何報告。

In connection with our audit of the consolidated financial statements, our responsibility is to read the other information and, in doing so, consider whether the other information is materially inconsistent with the consolidated financial statements or our knowledge obtained in the audit or otherwise appears to be materially misstated. If, based on the work we have performed, we conclude that there is a material misstatement of this other information, we are required to report that fact. We have nothing to report in this regard.

董事就綜合財務報表須承擔的責任

RESPONSIBILITIES OF THE DIRECTORS FOR THE CONSOLIDATED FINANCIAL STATEMENTS

貴公司董事須負責根據香港會計師公會頒布的《香港財務報告準則》及香港《公司條例》的披露規定擬備真實而中肯的綜合財務報表，並對其認為為使綜合財務報表的擬備不存在由於欺詐或錯誤而導致的重大錯誤陳述所需的內部監控負責。

The directors of the Company are responsible for the preparation of the consolidated financial statements that give a true and fair view in accordance with HKFRSs issued by the HKICPA and the disclosure requirements of the Hong Kong Companies Ordinance, and for such internal control as the directors determine is necessary to enable the preparation of consolidated financial statements that are free from material misstatement, whether due to fraud or error.

在擬備綜合財務報表時， 貴公司董事負責評估 貴集團持續經營的能力，並在適用情況下披露與持續經營有關的事項，以及使用持續經營為會計基礎，除非 貴公司董事有意將 貴集團清盤或停止經營，或別無其他實際的替代方案。

In preparing the consolidated financial statements, the directors of the Company are responsible for assessing the Group's ability to continue as a going concern, disclosing, as applicable, matters related to going concern and using the going concern basis of accounting unless the directors of the Company either intend to liquidate the Group or to cease operations or have no realistic alternative but to do so.

審核委員會協助 貴公司董事履行職責，監督 貴集團的財務報告過程。

The directors of the Company are assisted by the Audit Committee in discharging their responsibilities for overseeing the Group's financial reporting process.

致：震雄集團有限公司列位股東
(於百慕達註冊成立之有限公司)

To the shareholders of Chen Hsong Holdings Limited
(Incorporated in Bermuda with limited liability)

核數師就審計綜合財務報表承擔的責任

AUDITOR'S RESPONSIBILITIES FOR THE AUDIT OF THE CONSOLIDATED FINANCIAL STATEMENTS

我們的目標，是對綜合財務報表整體是否不存在由於欺詐或錯誤而導致的重大錯誤陳述取得合理保證，並出具包括我們意見的核數師報告書。我們遵照百慕達一九八一年公司法第90條的法規，僅對全體成員作出報告，除此以外，本報告書並無其他用途。我們不會就核數師報告書的內容向任何其他人士負上或承擔任何責任。

Our objectives are to obtain reasonable assurance about whether the consolidated financial statements as a whole are free from material misstatement, whether due to fraud or error, and to issue an auditor's report that includes our opinion. Our report is made solely to you, as a body, in accordance with section 90 of the Bermuda Companies Act 1981, and for no other purpose. We do not assume responsibility towards or accept liability to any other person for the contents of this report.

合理保證是高水平的保證，但不能保證按照《香港審計準則》進行的審計，在某一重大錯誤陳述存在時總能發現。錯誤陳述可以由欺詐或錯誤引起，如果合理預期它們單獨或匯總起來可能影響綜合財務報表使用者依賴綜合財務報表所作出的經濟決定，則有關的錯誤陳述可被視作重大。

Reasonable assurance is a high level of assurance, but is not a guarantee that an audit conducted in accordance with HKSAs will always detect a material misstatement when it exists. Misstatements can arise from fraud or error and are considered material if, individually or in the aggregate, they could reasonably be expected to influence the economic decisions of users taken on the basis of these consolidated financial statements.

在根據《香港審計準則》進行審計的過程中，我們運用了專業判斷，保持了專業懷疑態度。我們亦：

As part of an audit in accordance with HKSAs, we exercise professional judgement and maintain professional skepticism throughout the audit. We also:

- 識別和評估由於欺詐或錯誤而導致綜合財務報表存在重大錯誤陳述的風險，設計及執行審計程序以應對這些風險，以及獲取充足和適當的審計憑證，作為我們意見的基礎。由於欺詐可能涉及串謀、偽造、蓄意遺漏、虛假陳述，或凌駕於內部監控之上，因此未能發現因欺詐而導致的重大錯誤陳述的風險高於未能發現因錯誤而導致的重大錯誤陳述的風險。

- Identify and assess the risks of material misstatement of the consolidated financial statements, whether due to fraud or error, design and perform audit procedures responsive to those risks, and obtain audit evidence that is sufficient and appropriate to provide a basis for our opinion. The risk of not detecting a material misstatement resulting from fraud is higher than for one resulting from error, as fraud may involve collusion, forgery, intentional omissions, misrepresentations, or the override of internal control.

- 瞭解與審計相關的內部監控，以設計適當的審計程序，但目的並非對　貴集團內部監控的有效性發表意見。

- Obtain an understanding of internal control relevant to the audit in order to design audit procedures that are appropriate in the circumstances, but not for the purpose of expressing an opinion on the effectiveness of the Group's internal control.

致：震雄集團有限公司列位股東
(於百慕達註冊成立之有限公司)

To the shareholders of Chen Hsong Holdings Limited
(Incorporated in Bermuda with limited liability)

核數師就審計綜合財務報表承擔的責任 *(續)*

- 評價董事所採用會計政策的恰當性及作出會計估計和相關披露的合理性。
- 對董事採用持續經營會計基礎的恰當性作出結論。根據所獲取的審計憑證，確定是否存在與事項或情況有關的重大不確定性，從而可能導致對　貴集團的持續經營能力產生重大疑慮。如果我們認為存在重大不確定性，則有必要在核數師報告書中提請使用者注意綜合財務報表中的相關披露。假若有關的披露不足，則我們應當發表非無保留意見。我們的結論是基於核數師報告日止所取得的審計憑證。然而，未來事項或情況可能導致　貴集團不能持續經營。
- 評價綜合財務報表的整體列報方式、結構和內容，包括披露，以及綜合財務報表是否中肯反映交易和事項。
- 就　貴集團內實體或業務活動的財務信息獲取充足、適當的審計憑證，以便對綜合財務報表發表意見。我們負責　貴集團審計的方向、監督和執行。我們為審計意見承擔全部責任。

除其他事項外，我們與審核委員會溝通了計劃的審計範圍、時間安排、重大審計發現等，包括我們在審計中識別出內部監控的任何重大缺陷。

AUDITOR'S RESPONSIBILITIES FOR THE AUDIT OF THE CONSOLIDATED FINANCIAL STATEMENTS *(continued)*

- Evaluate the appropriateness of accounting policies used and the reasonableness of accounting estimates and related disclosures made by the directors.
- Conclude on the appropriateness of the directors' use of the going concern basis of accounting and, based on the audit evidence obtained, whether a material uncertainty exists related to events or conditions that may cast significant doubt on the Group's ability to continue as a going concern. If we conclude that a material uncertainty exists, we are required to draw attention in our auditor's report to the related disclosures in the consolidated financial statements or, if such disclosures are inadequate, to modify our opinion. Our conclusions are based on the audit evidence obtained up to the date of our auditor's report. However, future events or conditions may cause the Group to cease to continue as a going concern.
- Evaluate the overall presentation, structure and content of the consolidated financial statements, including the disclosures, and whether the consolidated financial statements represent the underlying transactions and events in a manner that achieves fair presentation.
- Obtain sufficient appropriate audit evidence regarding the financial information of the entities or business activities within the Group to express an opinion on the consolidated financial statements. We are responsible for the direction, supervision and performance of the group audit. We remain solely responsible for our audit opinion.

We communicate with the Audit Committee regarding, among other matters, the planned scope and timing of the audit and significant audit findings, including any significant deficiencies in internal control that we identify during our audit.

致：震雄集團有限公司列位股東
(於百慕達註冊成立之有限公司)

To the shareholders of Chen Hsong Holdings Limited
(Incorporated in Bermuda with limited liability)

核數師就審計綜合財務報表承擔的責任 *(續)*

AUDITOR'S RESPONSIBILITIES FOR THE AUDIT OF THE CONSOLIDATED FINANCIAL STATEMENTS *(continued)*

我們還向審核委員會提交聲明，說明我們已符合有關獨立性的相關專業道德要求，並與他們溝通有可能合理地被認為會影響我們獨立性的所有關係和其他事項，以及為消除對獨立性的威脅所採取的行動或防範措施(若適用)。

We also provide the Audit Committee with a statement that we have complied with relevant ethical requirements regarding independence and to communicate with them all relationships and other matters that may reasonably be thought to bear on our independence, and where applicable, actions taken to eliminate threats or safeguards applied.

從與審核委員會溝通的事項中，我們確定哪些事項對本期綜合財務報表的審計最為重要，因而構成關鍵審計事項。我們在核數師報告書中描述這些事項，除非法律法規不允許公開披露這些事項，或在極端罕見的情況下，如果合理預期在我們報告書中溝通某事項造成的負面後果超過產生的公眾利益，我們決定不應在報告書中溝通該事項。

From the matters communicated with the Audit Committee, we determine those matters that were of most significance in the audit of the consolidated financial statements of the current period and are therefore the key audit matters. We describe these matters in our auditor's report unless law or regulation precludes public disclosure about the matter or when, in extremely rare circumstances, we determine that a matter should not be communicated in our report because the adverse consequences of doing so would reasonably be expected to outweigh the public interest benefits of such communication.

出具本獨立核數師報告書的審計項目合夥人是黃家榮。

The engagement partner on the audit resulting in this independent auditor's report is Wong Ka Wing.

安永會計師事務所
執業會計師
香港鰂魚涌
英皇道979號
太古坊一座27樓

二零二三年六月二十六日

Ernst & Young
Certified Public Accountants
27/F One Taikoo Place
979 King's Road
Quarry Bay, Hong Kong

26 June 2023

綜合收益表
截至二零二三年三月三十一日止年度

Consolidated Income Statement
Year ended 31 March 2023

(港幣千元)	*(HK$'000)*	*附註 Notes*	**2023**	2022
收益	**REVENUE**	*6*	**2,312,584**	2,728,763
銷售成本	Cost of sales		**(1,764,532)**	(2,081,488)
毛利	Gross profit		**548,052**	647,275
其他收入及收益淨額	Other income and gains, net		**120,093**	111,509
銷售及分銷支出	Selling and distribution expenses		**(261,949)**	(294,749)
行政支出	Administrative expenses		**(156,874)**	(148,754)
其他經營支出淨額	Other operating expenses, net		**(88,310)**	(76,184)
融資成本	Finance costs	*8*	**(1,157)**	(1,306)
應佔聯營公司溢利減虧損	Share of profits less losses of associates		**(914)**	777
除税前溢利	**PROFIT BEFORE TAX**	*7*	**158,941**	238,568
所得税支出	Income tax expense	*11*	**(30,156)**	(24,574)
本年度溢利	**PROFIT FOR THE YEAR**		**128,785**	213,994
歸屬於：	**ATTRIBUTABLE TO:**			
本公司權益持有人	Equity holders of the Company		**130,289**	213,309
非控股權益	Non-controlling interests		**(1,504)**	685
			128,785	213,994
本公司權益持有人應佔每股盈利	**EARNINGS PER SHARE ATTRIBUTABLE TO EQUITY HOLDERS OF THE COMPANY**	*13*		
基本*(港仙)*	Basic *(HK cents)*		**20.7**	33.8
攤薄*(港仙)*	Diluted *(HK cents)*		**20.7**	33.8

綜合全面收益表
截至二零二三年三月三十一日止年度

Consolidated Statement of Comprehensive Income
Year ended 31 March 2023

(港幣千元)	*(HK$'000)*	**2023**	2022
本年度溢利	**PROFIT FOR THE YEAR**	**128,785**	213,994
其他全面收益／(支出)	**OTHER COMPREHENSIVE INCOME/(EXPENSES)**		
可於其後期間重新分類至收益表之其他全面收益／(支出):	*Other comprehensive income/(expenses) that may be reclassified to the income statement in subsequent periods:*		
匯兑差額：	Exchange differences:		
換算海外業務之匯兑差額	Exchange differences on translation of foreign operations	**(189,592)**	101,158
應佔聯營公司其他全面收益／(支出)	Share of other comprehensive income/(expenses) of associates	**(1,952)**	1,294
可於其後期間重新分類至收益表之其他全面收益／(支出)淨額	Net other comprehensive income/(expenses) that may be reclassified to the income statement in subsequent periods	**(191,544)**	102,452
不會於其後期間重新分類至收益表之其他全面收益：	*Other comprehensive income that will not be reclassified to the income statement in subsequent periods:*		
定額福利計劃之精算收益	Actuarial gains on defined benefit plan	**257**	1,361
本年度其他全面收益／(支出)	**OTHER COMPREHENSIVE INCOME/(EXPENSES) FOR THE YEAR**	**(191,287)**	103,813
本年度總全面收益／(支出)	**TOTAL COMPREHENSIVE INCOME/(EXPENSES) FOR THE YEAR**	**(62,502)**	317,807
歸屬於：	**ATTRIBUTABLE TO:**		
本公司權益持有人	Equity holders of the Company	**(59,834)**	316,446
非控股權益	Non-controlling interests	**(2,668)**	1,361
		(62,502)	317,807

綜合財務狀況表
於二零二三年三月三十一日

Consolidated Statement of Financial Position
As at 31 March 2023

(港幣千元)	*(HK$'000)*	*附註 Notes*	**2023**	2022
非流動資產	**NON-CURRENT ASSETS**			
物業、廠房及設備	Property, plant and equipment	*14*	**585,382**	647,970
投資物業	Investment properties	*15*	**332,866**	359,296
使用權資產	Right-of-use assets	*16(a)*	**40,362**	39,149
商譽	Goodwill	*17*	**51,905**	51,905
無形資產	Intangible assets	*18*	**3,579**	1,834
於聯營公司之投資	Investments in associates	*19*	**25,663**	28,529
遞延稅項資產	Deferred tax assets	*30*	**37,014**	43,548
購買物業、廠房及設備訂金	Deposits for purchases of items of property, plant and equipment		**15,248**	3,607
應收貿易及票據賬款	Trade and bills receivables	*21*	**82,200**	99,985
應收融資租賃賬款	Finance lease receivables	*23*	**202**	371
定額福利資產	Defined benefit assets	*29*	**2,611**	1,061
抵押銀行存款	Pledged bank deposits	*24*	**1,353**	2,851
非流動資產總計	Total non-current assets		**1,178,385**	1,280,106
流動資產	**CURRENT ASSETS**			
存貨	Inventories	*20*	**791,763**	1,061,900
應收貿易及票據賬款	Trade and bills receivables	*21*	**1,397,251**	1,245,418
訂金、預付款項及其他應收賬款	Deposits, prepayments and other receivables	*22*	**111,344**	141,281
應收融資租賃賬款	Finance lease receivables	*23*	**1,414**	4,311
抵押銀行存款	Pledged bank deposits	*24*	**24,490**	24,400
現金及銀行結存	Cash and bank balances	*25*	**644,662**	671,911
流動資產總計	Total current assets		**2,970,924**	3,149,221
流動負債	**CURRENT LIABILITIES**			
應付貿易及票據賬款	Trade and bills payables	*26*	**623,367**	695,694
其他應付賬款、應計負債及合約負債	Other payables, accruals and contract liabilities	*27*	**314,905**	348,776
租賃負債	Lease liabilities	*16(b)*	**2,862**	1,599
計息銀行貸款	Interest-bearing bank borrowings	*28*	**–**	21,568
應付稅項	Tax payable		**39,386**	39,094
流動負債總計	Total current liabilities		**980,520**	1,106,731
流動資產淨值	**NET CURRENT ASSETS**		**1,990,404**	2,042,490
資產總值減流動負債	**TOTAL ASSETS LESS CURRENT LIABILITIES**		**3,168,789**	3,322,596

(港幣千元)	*(HK$'000)*	*附註 Notes*	**2023**	2022
非流動負債	**NON-CURRENT LIABILITIES**			
其他應付賬款及應計負債	Other payables and accruals	*27*	**6,364**	11,674
租賃負債	Lease liabilities	*16(b)*	**17,064**	4,556
遞延稅項負債	Deferred tax liabilities	*30*	**77,180**	77,904
非流動負債總計	Total non-current liabilities		**100,608**	94,134
資產淨值	**NET ASSETS**		**3,068,181**	3,228,462
權益	**EQUITY**			
本公司權益持有人應佔權益	**Equity attributable to equity holders of the Company**			
已發行股本	Issued share capital	*31*	**63,053**	63,053
儲備	Reserves	*33*	**2,986,087**	3,145,996
			3,049,140	3,209,049
非控股權益	**Non-controlling interests**		**19,041**	19,413
權益總計	**TOTAL EQUITY**		**3,068,181**	3,228,462

蔣麗苑 Lai Yuen CHIANG
主席兼集團總裁 Chairman and Chief Executive Officer

鍾效良 Stephen Hau Leung CHUNG
董事 Director

綜合權益變動表
截至二零二三年三月三十一日止年度

Consolidated Statement of Changes in Equity
Year ended 31 March 2023

			2023					
			本公司權益持有人應佔					
			Attributable to equity holders of the Company					
(港幣千元)	*(HK$'000)*	*附註 Notes*	已發行股本 Issued share capital	股份溢價賬 Share premium account	資本贖回儲備 Capital redemption reserve	資本儲備 Capital reserve	法定儲備 Statutory reserve	一般儲備 General reserve
於二零二二年四月一日	At 1 April 2022		63,053	509,580	295	55,271	148,176	2,351
本年度溢利／(虧損)	Profit/(loss) for the year		–	–	–	–	–	–
本年度其他全面收益／(支出):	Other comprehensive income/(expenses) for the year:							
換算海外業務之匯兑差額	Exchange differences on translation of foreign operations		–	–	–	–	–	–
應佔聯營公司其他全面支出	Share of other comprehensive expenses of associates		–	–	–	–	–	–
定額福利計劃之精算收益	Actuarial gains on defined benefit plan	*29*	–	–	–	–	–	–
本年度總全面收益／(支出)	Total comprehensive income/(expenses) for the year		–	–	–	–	–	–
一間附屬公司非控股股東資本投入	Capital contribution by a non-controlling shareholder of a subsidiary	*34(a)*	–	–	–	–	–	–
以股權支付的購股權安排	Equity-settled share option arrangements	*32*	–	–	–	1,441	–	–
保留溢利轉撥	Transfer from retained profits		–	–	–	318	1,465	–
截至二零二二年三月三十一日止年度之末期股息	Final dividend for the year ended 31 March 2022	*12*	–	–	–	–	–	–
中期股息	Interim dividend	*12*	–	–	–	–	–	–
於二零二三年三月三十一日	At 31 March 2023		63,053	509,580*	295*	57,030*	149,641*	2,351*

			2023					
			本公司權益持有人應佔					
			Attributable to equity holders of the Company					
(港幣千元)	*(HK$'000)*	*附註* *Notes*	資產重估儲備 Asset revaluation reserve	匯兑變動儲備 Exchange fluctuation reserve	保留溢利 Retained profits	總計 Total	非控股權益 Non-controlling interests	權益總計 Total equity
於二零二二年四月一日	At 1 April 2022		81,231	353,334	1,995,758	3,209,049	19,413	3,228,462
本年度溢利／(虧損)	Profit/(loss) for the year		–	–	130,289	130,289	(1,504)	128,785
本年度其他全面收益／(支出):	Other comprehensive income/(expenses) for the year:							
換算海外業務之匯兑差額	Exchange differences on translation of foreign operations		–	(188,428)	–	(188,428)	(1,164)	(189,592)
應佔聯營公司其他全面支出	Share of other comprehensive expenses of associates		–	(1,952)	–	(1,952)	–	(1,952)
定額福利計劃之精算收益	Actuarial gains on defined benefit plan	*29*	–	–	257	257	–	257
本年度總全面收益／(支出)	Total comprehensive income/(expenses) for the year		–	(190,380)	130,546	(59,834)	(2,668)	(62,502)
一間附屬公司非控股股東資本投入	Capital contribution by a non-controlling shareholder of a subsidiary	*34(a)*	–	–	–	–	2,296	2,296
以股權支付的購股權安排	Equity-settled share option arrangements	*32*	–	–	–	1,441	–	1,441
保留溢利轉撥	Transfer from retained profits		–	–	(1,783)	–	–	–
截至二零二二年三月三十一日止年度之末期股息	Final dividend for the year ended 31 March 2022	*12*	–	–	(73,142)	(73,142)	–	(73,142)
中期股息	Interim dividend	*12*	–	–	(28,374)	(28,374)	–	(28,374)
於二零二三年三月三十一日	At 31 March 2023		81,231*	162,954*	2,023,005*	3,049,140	19,041	3,068,181

			2022					
			本公司權益持有人應佔					
			Attributable to equity holders of the Company					
(港幣千元)	*(HK$'000)*	*附註 Notes*	已發行股本 Issued share capital	股份溢價賬 Share premium account	資本贖回儲備 Capital redemption reserve	資本儲備 Capital reserve	法定儲備 Statutory reserve	一般儲備 General reserve
於二零二一年四月一日	At 1 April 2021		63,053	509,580	295	53,901	147,061	2,351
本年度溢利	Profit for the year		–	–	–	–	–	–
本年度其他全面收益：	Other comprehensive income for the year:							
換算海外業務之匯兑差額	Exchange differences on translation of foreign operations		–	–	–	–	–	–
應佔聯營公司其他全面收益	Share of other comprehensive income of associates		–	–	–	–	–	–
定額福利計劃之精算收益	Actuarial gains on defined benefit plan	*29*	–	–	–	–	–	–
本年度總全面收益	Total comprehensive income for the year		–	–	–	–	–	–
一間附屬公司非控股股東資本投入	Capital contribution by a non-controlling shareholder of a subsidiary	*34(a)*	–	–	–	–	–	–
以股權支付的購股權安排	Equity-settled share option arrangements	*32*	–	–	–	1,370	–	–
保留溢利轉撥	Transfer from retained profits		–	–	–	–	1,115	–
截至二零二一年三月三十一日止年度之末期股息	Final dividend for the year ended 31 March 2021	*12*	–	–	–	–	–	–
中期股息	Interim dividend	*12*	–	–	–	–	–	–
應付一間附屬公司非控股股東股息	Dividend payable to a non-controlling shareholder of a subsidiary		–	–	–	–	–	–
於二零二二年三月三十一日	At 31 March 2022		63,053	509,580*	295*	55,271*	148,176*	2,351*

* 該等儲備賬項包括綜合財務狀況表內之綜合儲備為港幣2,986,087,000元(二零二二年：港幣3,145,996,000元)。

* These reserve accounts comprise the consolidated reserves of HK$2,986,087,000 (2022: HK$3,145,996,000) in the consolidated statement of financial position.

			2022					
			本公司權益持有人應佔					
			Attributable to equity holders of the Company					
(港幣千元)	*(HK$'000)*	*附註 Notes*	資產重估儲備 Asset revaluation reserve	匯兑變動儲備 Exchange fluctuation reserve	保留溢利 Retained profits	總計 Total	非控股權益 Non-controlling interests	權益總計 Total equity
於二零二一年四月一日	At 1 April 2021		81,231	251,558	1,887,502	2,996,532	16,514	3,013,046
本年度溢利	Profit for the year		–	–	213,309	213,309	685	213,994
本年度其他全面收益：	Other comprehensive income for the year:							
換算海外業務之匯兑差額	Exchange differences on translation of foreign operations		–	100,482	–	100,482	676	101,158
應佔聯營公司其他全面收益	Share of other comprehensive income of associates		–	1,294	–	1,294	–	1,294
定額福利計劃之精算收益	Actuarial gains on defined benefit plan	*29*	–	–	1,361	1,361	–	1,361
本年度總全面收益	Total comprehensive income for the year		–	101,776	214,670	316,446	1,361	317,807
一間附屬公司非控股股東資本投入	Capital contribution by a non-controlling shareholder of a subsidiary	*34(a)*	–	–	–	–	2,038	2,038
以股權支付的購股權安排	Equity-settled share option arrangements	*32*	–	–	–	1,370	–	1,370
保留溢利轉撥	Transfer from retained profits		–	–	(1,115)	–	–	–
截至二零二一年三月三十一日止年度之末期股息	Final dividend for the year ended 31 March 2021	*12*	–	–	(72,511)	(72,511)	–	(72,511)
中期股息	Interim dividend	*12*	–	–	(32,788)	(32,788)	–	(32,788)
應付一間附屬公司非控股股東股息	Dividend payable to a non-controlling shareholder of a subsidiary		–	–	–	–	(500)	(500)
於二零二二年三月三十一日	At 31 March 2022		81,231*	353,334*	1,995,758*	3,209,049	19,413	3,228,462

綜合現金流量表
截至二零二三年三月三十一日止年度

Consolidated Statement of Cash Flows
Year ended 31 March 2023

(港幣千元)	*(HK$'000)*	*附註 Notes*	**2023**	2022
經營業務之現金流量	**CASH FLOWS FROM OPERATING ACTIVITIES**			
除税前溢利	Profit before tax		**158,941**	238,568
調整：	Adjustments for:			
融資成本	Finance costs	*8*	**1,157**	1,306
應佔聯營公司溢利減虧損	Share of profits less losses of associates	*19*	**914**	(777)
利息收入	Interest income	*7*	**(12,335)**	(15,852)
融資租賃利息收入	Finance lease interest income	*7*	**(210)**	(493)
物業、廠房及設備之折舊	Depreciation of property, plant and equipment	*7*	**57,024**	53,967
使用權資產之折舊	Depreciation of right-of-use assets	*7*	**2,971**	2,729
無形資產之攤銷	Amortization of intangible assets	*7*	**419**	203
出售物業、廠房及設備及使用權資產之收益淨額	Gain on disposal of items of property, plant and equipment and right-of-use asset, net	*7*	**(30,953)**	(1,225)
物業、廠房及設備之註銷	Write-off of items of property, plant and equipment	*7*	**1,869**	1,153
投資物業之公平值收益	Fair value gains on investment properties	*7*	**–**	(13,810)
存貨撥備／(撥備撥回)淨額	Provision/(write-back of provision) for inventories, net	*7*	**(11,520)**	1,414
應收貿易賬款減值／(減值撥回)淨額	Impairment/(write-back of impairment) of trade receivables, net	*7*	**(1,293)**	3,551
應收融資租賃賬款減值撥回淨額	Write-back of impairment of finance lease receivables, net	*7*	**(846)**	(2,023)
其他應收賬款減值撥回淨額	Write-back of impairment of other receivables, net	*7*	**–**	(86)
以股權支付的購股權支出	Equity-settled share option expenses	*32*	**1,441**	1,370
			167,579	269,995
存貨減少／(增加)	Decrease/(increase) in inventories		**221,605**	(321,076)
應收貿易及票據賬款增加	Increase in trade and bills receivables		**(186,315)**	(10,065)
應收融資租賃賬款減少	Decrease in finance lease receivables		**1,315**	5,855
訂金、預付款項及其他應收賬款減少／(增加)	Decrease/(increase) in deposits, prepayments and other receivables		**29,667**	(45,798)
應付貿易及票據賬款減少	Decrease in trade and bills payables		**(41,260)**	(82,684)
其他應付賬款、應計負債及合約負債減少	Decrease in other payables, accruals and contract liabilities		**(31,986)**	(37,030)
供款予定額福利計劃	Contributions to defined benefit plan		**(1,363)**	(1,550)

(港幣千元)	*(HK$'000)*	*附註 Notes*	**2023**	2022
經營產生／(流出)之現金	Cash generated from/(used in) operations		**159,242**	(222,353)
已付利息	Interest paid		**(1,157)**	(1,306)
已收融資租賃利息	Finance lease interest received		**210**	493
退回海外稅項	Overseas taxes refunded		**810**	4,275
已付海外稅項	Overseas taxes paid		**(21,574)**	(56,717)
經營業務之現金流入／(流出)淨額	Net cash flows from/(used in) operating activities		**137,531**	(275,608)
投資業務之現金流量	**CASH FLOWS FROM INVESTING ACTIVITIES**			
購買物業、廠房及設備	Purchases of items of property, plant and equipment	*34(a)*	**(48,984)**	(127,377)
出售物業、廠房及設備及使用權資產所得款項	Proceeds from disposal of items of property, plant and equipment and right-of-use asset		**48,986**	1,817
已收利息	Interest received		**12,335**	15,852
購買物業、廠房及設備訂金增加	Increase in deposits for purchases of items of property, plant and equipment	*34(a)*	**(14,940)**	(3,200)
提取抵押銀行存款	Withdrawal of pledged bank deposits		**62,723**	70,499
存放抵押銀行存款	Placement of pledged bank deposits		**(63,319)**	(43,820)
投資業務之現金流出淨額	Net cash flows used in investing activities		**(3,199)**	(86,229)
融資業務之現金流量	**CASH FLOWS FROM FINANCING ACTIVITIES**			
新借銀行貸款	New bank loans		**72,500**	–
償還銀行貸款	Repayment of bank loans		**(92,958)**	(45,000)
已付股息	Dividends paid		**(101,516)**	(105,299)
租賃付款之本金部分	Principal portion of lease payments	*34(c)*	**(1,511)**	(1,597)
融資業務之現金流出淨額	Net cash flows used in financing activities		**(123,485)**	(151,896)

(港幣千元)	*(HK$'000)*	*附註 Notes*	**2023**	2022
現金及現金等價物之增加／(減少)淨額	**NET INCREASE/(DECREASE) IN CASH AND CASH EQUIVALENTS**		**10,847**	(513,733)
年初之現金及現金等價物	Cash and cash equivalents at beginning of year		**671,911**	1,146,188
匯率變動之影響淨額	Effect of foreign exchange rate changes, net		**(38,096)**	39,456
年終之現金及現金等價物	**CASH AND CASH EQUIVALENTS AT END OF YEAR**		**644,662**	671,911
現金及現金等價物結存之分析	**ANALYSIS OF BALANCES OF CASH AND CASH EQUIVALENTS**			
現金及銀行結存	Cash and bank balances	*25*	**346,249**	583,503
於存款時距離原期滿日不足三個月之銀行存款	Bank deposits with original maturity of less than three months when acquired	*25*	**298,413**	88,408
			644,662	671,911

1. 公司及集團資料

震雄集團有限公司(「本公司」)為於百慕達註冊成立之有限公司。於年內，本公司之主要營業地點位於香港新界大埔大埔工業邨大宏街13至15號。從二零二三年三月二十日起生效，本公司之主要營業地點變更為香港威非路道18號萬國寶通中心20樓2001室。

於年內，本集團主要從事製造及銷售注塑機及有關產品。

董事認為本公司之最終控股公司為於巴哈馬註冊成立之Cititrust (Bahamas) Limited。香港註冊成立之震雄投資有限公司(「震雄投資」)則為本公司之直接控股公司。

主要附屬公司之詳情載於第224至226頁。

1. CORPORATE AND GROUP INFORMATION

Chen Hsong Holdings Limited (the "Company") is a limited liability company incorporated in Bermuda. During the year, the principal place of business of the Company was located at 13-15 Dai Wang Street, Tai Po Industrial Estate, Tai Po, New Territories, Hong Kong. With effect from 20 March 2023, the principal place of business of the Company was changed to Unit 2001, 20th Floor, Citicorp Centre, 18 Whitfield Road, Hong Kong.

During the year, the Group was principally involved in the manufacture and sale of plastic injection moulding machines and related products.

In the opinion of the directors, the Company's ultimate holding company is Cititrust (Bahamas) Limited, a company incorporated in the Bahamas. Chen Hsong Investments Limited ("CH Investments"), a company incorporated in Hong Kong, is the Company's immediate holding company.

Particulars of the principal subsidiaries are set out on pages 224 to 226.

2.1 編製基準

該等財務報表乃按照香港會計師公會(「香港會計師公會」)頒布之香港財務報告準則(「香港財務報告準則」)(包括所有香港財務報告準則、香港會計準則(「香港會計準則」)及詮釋)、香港公認會計原則及香港公司條例之披露要求而編製。除投資物業按公平值計算外，財務報表乃按歷史成本慣例而編製。定額福利資產以預計單位基數精算估值法計量，並於財務報表附註3進一步解釋。財務報表以港幣呈列，除了另有指明，所有金額均以千元(港幣千元)列報。

2.1 BASIS OF PREPARATION

These financial statements have been prepared in accordance with Hong Kong Financial Reporting Standards ("HKFRSs") (which include all Hong Kong Financial Reporting Standards, Hong Kong Accounting Standards ("HKASs") and Interpretations) issued by the Hong Kong Institute of Certified Public Accountants ("HKICPA"), accounting principles generally accepted in Hong Kong and the disclosure requirements of the Hong Kong Companies Ordinance. They have been prepared under the historical cost convention, except for investment properties which have been measured at fair value. Defined benefit assets are measured using the projected unit credit actuarial valuation method as further explained in note 3 to the financial statements. These financial statements are presented in Hong Kong dollars and all values are rounded to the nearest thousand (HK$'000) except when otherwise indicated.

2.1 編製基準*(續)*

綜合基準

綜合財務報表包括本公司及其附屬公司(全部統稱為「本集團」)截至二零二三年三月三十一日止年度之財務報表。附屬公司為本公司直接或間接控制的實體(包括結構性實體)。當本集團對參與投資對象業務的浮動回報承擔風險或享有權利以及能透過對投資對象的權力(如本集團獲賦予現有能力以主導投資對象相關活動的既存權利)影響該等回報時，即取得控制權。

在一般情況下，有一個假設，即大多數投票權形成控制權。倘本公司直接或間接擁有少於投資對象大多數投票或類似的權利，則本集團於評估其是否擁有對投資對象的權力時會考慮一切相關事實及情況，包括：

(a) 與投資對象其他投票持有人的合約安排；

(b) 其他合約安排所產生的權利；及

(c) 本集團的投票權及潛在投票權。

附屬公司財務報表使用與本公司一致的會計政策按相同申報期編製。附屬公司業績自本集團獲得控制權之日起綜合入賬，直至控制權終止之日為止。

即使會導致非控股權益出現虧損結餘，收益表及其他全面收入的各個組成部分仍會歸屬於本公司擁有人及非控股權益。所有與本集團成員公司間交易有關的集團內公司間資產及負債、權益、收入、支出及現金流量於綜合賬目時全數抵銷。

2.1 BASIS OF PREPARATION *(continued)*

Basis of consolidation

The consolidated financial statements include the financial statements of the Company and its subsidiaries (collectively referred to as the "Group") for the year ended 31 March 2023. A subsidiary is an entity (including a structured entity), directly or indirectly, controlled by the Company. Control is achieved when the Group is exposed, or has rights, to variable returns from its involvement with the investee and has the ability to affect those returns through its power over the investee (i.e., existing rights that give the Group the current ability to direct the relevant activities of the investee).

Generally, there is a presumption that a majority of voting rights results in control. When the Company has, directly or indirectly, less than a majority of the voting or similar rights of an investee, the Group considers all relevant facts and circumstances in assessing whether it has power over an investee, including:

(a) the contractual arrangement with the other vote holders of the investee;

(b) rights arising from other contractual arrangements; and

(c) the Group's voting rights and potential voting rights.

The financial statements of the subsidiaries are prepared for the same reporting period as the Company, using consistent accounting policies. The results of subsidiaries are consolidated from the date on which the Group obtains control, and continue to be consolidated until the date that such control ceases.

Profit or loss and each component of other comprehensive income are attributed to the owners of the Company and to the non-controlling interests, even if this results in the non-controlling interests having a deficit balance. All intra-group assets and liabilities, equity, income, expenses and cash flows relating to transactions between members of the Group are eliminated in full on consolidation.

2.1 編製基準*(續)*

綜合基準*(續)*

倘事實及情況顯示以上所述三項控制元素中的一項或多項元素有變動，則本集團會重新評估其是否擁有投資對象的控制權。倘並無失去控制權，則附屬公司之擁有權權益變動會入賬列為權益交易。

倘本集團失去對附屬公司之控制權，則終止確認(i)該附屬公司之資產(包括商譽)及負債，(ii)任何非控股權益之賬面值及(iii)於權益內記錄之累計換算差額；及確認(i)已收代價之公平值，(ii)所保留任何投資之公平值及(iii)任何因此於損益產生之盈餘或虧絀。先前於其他全面收入已確認的本集團應佔部分會視乎情況，按倘本集團直接出售相關資產或負債所要求的相同基準重新分類至收益表或保留溢利(如適當)。

2.1 BASIS OF PREPARATION *(continued)*

Basis of consolidation *(continued)*

The Group reassesses whether or not it controls an investee if facts and circumstances indicate that there are changes to one or more of the three elements of control described above. A change in the ownership interest of a subsidiary, without a loss of control, is accounted for as an equity transaction.

If the Group loses control over a subsidiary, it derecognizes (i) the assets (including goodwill) and liabilities of the subsidiary, (ii) the carrying amount of any non-controlling interest and (iii) the cumulative translation differences recorded in equity; and recognizes (i) the fair value of the consideration received, (ii) the fair value of any investment retained and (iii) any resulting surplus or deficit in profit or loss. The Group's share of components previously recognized in other comprehensive income is reclassified to the income statement or retained profits, as appropriate, on the same basis as would be required if the Group had directly disposed of the related assets or liabilities.

2.2 會計政策及披露變動

本集團於本年度的財務報表首次採納以下經修訂之香港財務報告準則。

香港財務報告準則第3號(修訂)	*概念框架之提述*
香港會計準則第16號(修訂)	*物業、廠房及設備作擬定用途前之所得款項*
香港會計準則第37號(修訂)	*虧損合約－履行合約之成本*
香港財務報告準則二零一八年至二零二零年之年度改進	香港財務報告準則第1號、香港財務報告準則第9號、香港財務報告準則第16號隨附之範例及香港會計準則第41號(修訂)

採納以上經修訂香港財務報告準則不會對本集團的財務狀況及表現產生任何重大財務影響。

2.2 CHANGES IN ACCOUNTING POLICIES AND DISCLOSURES

The Group has adopted the following revised HKFRSs for the first time for the current year's financial statements.

Amendments to HKFRS 3	*Reference to the Conceptual Framework*
Amendments to HKAS 16	*Property, Plant and Equipment: Proceeds before Intended Use*
Amendments to HKAS 37	*Onerous Contracts – Cost of Fulfilling a Contract*
Annual Improvements to HKFRSs 2018-2020	Amendments to HKFRS 1, HKFRS 9, Illustrative Examples accompanying HKFRS 16, and HKAS 41

The adoption of the above revised HKFRSs has had no significant financial impact on the financial position and performance of the Group.

2.3 已頒布但未生效的香港財務報告準則

本集團並無於該等財務報表內應用以下已頒布但尚未生效之新訂及經修訂之香港財務報告準則。

香港財務報告準則第10號及香港會計準則第28號(2011年)(修訂)	*投資者與其聯營公司或合營企業之間的資產出售或注資*[3]
香港財務報告準則第16號(修訂)	*售後回租的租賃負債*[2]
香港財務報告準則第17號	*保險合約*[1]
香港財務報告準則第17號(修訂)	*保險合約*[1,5]
香港財務報告準則第17號(修訂)	*初次採納香港財務報告準則第17號及香港財務報告準則第9號－比較資料*[6]
香港會計準則第1號(修訂)	*負債分類為流動或非流動*(「二零二零年修訂」)[2,4]
香港會計準則第1號(修訂)	*附帶契諾的非流動負債*(「二零二二年修訂」)[2]

2.3 ISSUED BUT NOT YET EFFECTIVE HONG KONG FINANCIAL REPORTING STANDARDS

The Group has not applied the following new and revised HKFRSs, that have been issued but are not yet effective, in these financial statements.

Amendments to HKFRS 10 and HKAS 28 (2011)	*Sale or Contribution of Assets between an Investor and its Associate or Joint Venture*[3]
Amendments to HKFRS 16	*Lease Liability in a Sale and Leaseback*[2]
HKFRS 17	*Insurance Contracts*[1]
Amendments to HKFRS 17	*Insurance Contracts*[1,5]
Amendment to HKFRS 17	*Initial Application of HKFRS 17 and HKFRS 9 – Comparative Information*[6]
Amendments to HKAS 1	*Classification of Liabilities as Current or Non-current* (the "2020 Amendments")[2,4]
Amendments to HKAS 1	*Non-current Liabilities with Covenants* (the "2022 Amendments")[2]

2.3 已頒布但未生效的香港財務報告準則 *(續)*

香港會計準則第1號及香港財務報告準則實務報告第2號(修訂)	*會計政策之披露*[1]
香港會計準則第8號(修訂)	*會計估計之定義*[1]
香港會計準則第12號(修訂)	*因一單項交易產生資產及負債有關之遞延稅項*[1]

1 於二零二三年一月一日或以後開始之年度期間生效
2 於二零二四年一月一日或以後開始之年度期間生效
3 尚未釐定強制生效日期，但可供採納
4 作為二零二二年修訂的結果，二零二零年修訂的生效日期延遲至二零二四年一月一日或以後開始之年度期間。此外，作為二零二零年修訂及二零二二年修訂的結果，香港詮釋第5號*財務報表的呈報－借款人對載有按要求償還條款的定期貸款的分類*已進行修訂，以使相應措詞保持一致而結論保持不變
5 作為於二零二零年十月所頒布香港財務報告準則第17號(修訂)之結果，於二零二三年一月一日之前開始之年度期間，香港財務報告準則第4號已作出修訂，以延長允許保險人應用香港會計準則第39號而非香港財務報告準則第9號之暫時豁免
6 實體於首次應用香港財務報告準則第17號時，可選擇應用本修訂所載列有關分類重疊法的過渡性選擇

本集團現正就初次採納新訂及經修訂之香港財務報告準則之影響作出評估，惟尚未能確定此等新訂及經修訂香港財務報告準則會否對其財務表現及財務狀況造成任何重大影響。

2.3 ISSUED BUT NOT YET EFFECTIVE HONG KONG FINANCIAL REPORTING STANDARDS *(continued)*

Amendments to HKAS 1 and HKFRS Practice Statement 2	*Disclosure of Accounting Policies*[1]
Amendments to HKAS 8	*Definition of Accounting Estimates*[1]
Amendments to HKAS 12	*Deferred Tax related to Assets and Liabilities arising from a Single Transaction*[1]

1 Effective for annual periods beginning on or after 1 January 2023
2 Effective for annual periods beginning on or after 1 January 2024
3 No mandatory effective date yet determined but available for adoption
4 As a consequence of the 2022 Amendments, the effective date of the 2020 Amendments was deferred to annual periods beginning on or after 1 January 2024. In addition, as a consequence of the 2020 Amendments and 2022 Amendments, Hong Kong Interpretation 5 *Presentation of Financial Statements – Classification by the Borrower of a Term Loan that Contains a Repayment on Demand Clause* was revised to align the corresponding wording with no change in conclusion
5 As a consequence of the amendments to HKFRS 17 issued in October 2020, HKFRS 4 was amended to extend the temporary exemption that permits insurers to apply HKAS 39 rather than HKFRS 9 for annual periods beginning before 1 January 2023
6 An entity that chooses to apply the transition option relating to the classification overlay set out in this amendment shall apply it on initial application of HKFRS 17

The Group is in the process of making an assessment of the impact of these new and revised HKFRSs upon initial application, but is not yet in a position to state whether these new and revised HKFRSs would have any significant impact on its financial performance and financial position.

3. 主要會計政策摘要

投資聯營公司及合營企業

聯營公司指本集團持有不少於20%投票權作為長期權益，且對其有顯著影響力之實體。顯著影響力指參與被投資方財務及經營決策之權力，惟並非控制或共同控制有關政策。

合營企業指一種合營安排，對安排擁有共同控制權之訂約方據此對合營企業之資產淨值擁有權利。共同控制指按照合約協定對一項安排所共有之控制，共同控制僅在有關活動要求享有控制權之訂約方作出一致同意之決定時存在。

本集團於聯營公司及合營企業之投資乃按本集團根據權益會計法應佔資產淨值減任何減值虧損於綜合財務狀況表列賬。

任何可能存在差異之會計政策已作出調整使之貫徹一致。本集團佔聯營公司及合營企業收購後業績及其他全面收益分別計入綜合收益表及綜合全面收益表內。此外，變動於聯營公司或合營企業權益直接確認時，本集團於綜合權益變動表確認其任何所佔變動(如適用)。本集團與其聯營公司或合營企業進行交易產生之未變現收益及虧損，將按本集團所佔聯營公司或合營企業之投資比率抵銷，惟未變現虧損證實是由已轉讓資產減值而產生則除外。收購聯營公司或合營企業所產生之商譽列作本集團於聯營公司或合營企業投資之一部分。

3. SUMMARY OF SIGNIFICANT ACCOUNTING POLICIES

Investments in associates and joint ventures

An associate is an entity in which the Group has a long-term interest of generally not less than 20% of the equity voting rights and over which it is in a position to exercise significant influence. Significant influence is the power to participate in the financial and operating policy decisions of the investee, but is not control or joint control over those policies.

A joint venture is a type of joint arrangement whereby the parties that have joint control of the arrangement have rights to the net assets of the joint venture. Joint control is the contractually agreed sharing of control of an arrangement, which exists only when decisions about the relevant activities require the unanimous consent of the parties sharing control.

The Group's investments in associates and joint ventures are stated in the consolidated statement of financial position at the Group's share of net assets under the equity method of accounting, less any impairment losses.

Adjustments are made to bring into line any dissimilar accounting policies that may exist. The Group's share of the post-acquisition results and other comprehensive income of associates and joint ventures is included in the consolidated income statement and consolidated statement of comprehensive income, respectively. In addition, when there has been a change recognized directly in the equity of the associate or joint venture, the Group recognizes its share of any changes, when applicable, in the consolidated statement of changes in equity. Unrealized gains and losses resulting from transactions between the Group and its associates or joint ventures are eliminated to the extent of the Group's investments in the associates or joint ventures, except where unrealized losses provide evidence of an impairment of the assets transferred. Goodwill arising from the acquisition of associates or joint ventures is included as part of the Group's investments in associates or joint ventures.

3. 主要會計政策摘要*(續)*

投資聯營公司及合營企業*(續)*

倘於聯營公司投資成為於合營企業投資(或於合營企業投資成為於聯營公司投資)，保留權益不予重新計量。相反，投資繼續按權益法列賬。在所有其他情況下，失去對聯營公司之重大影響力或對合營企業之共同控制權後，本集團計量及確認按公平值計量之任何保留投資。失去重大影響力或共同控制權後，聯營公司或合營企業之賬面值與保留投資之公平值及出售所得款項之間之差額於收益表確認。

業務合併及商譽

業務合併乃以購買法入賬。轉讓之代價乃以收購日期的公平值計量，該公平值為本集團轉讓的資產於收購日期的公平值，本集團向被收購方之前擁有人承擔的負債及本集團發行以換取被收購方控制權之股本權益總和。於各業務合併中，本集團選擇是否以公平值或被收購方可識別資產淨值的應佔比例，計量於被收購方屬現時擁有人權益之非控股權益，並賦予擁有人權利，於清盤時按比例分佔公司的淨資產。非控股權益之所有其他部分乃按公平值計量。收購相關成本於產生時列為開支。

當所收購的一系列活動及資產包括一項輸入數據和一個實質流程，且兩者可為創造輸出作出重大貢獻時，本集團確定其已收購一項業務。

3. SUMMARY OF SIGNIFICANT ACCOUNTING POLICIES *(continued)*

Investments in associates and joint ventures *(continued)*

If an investment in an associate becomes an investment in a joint venture or vice versa, the retained interest is not remeasured. Instead, the investment continues to be accounted for under the equity method. In all other cases, upon loss of significant influence over the associate or joint control over the joint venture, the Group measures and recognizes any retained investment at its fair value. Any difference between the carrying amount of the associate or joint venture upon loss of significant influence or joint control and the fair value of the retained investment and proceeds from disposal is recognized in the income statement.

Business combinations and goodwill

Business combinations are accounted for using the acquisition method. The consideration transferred is measured at the acquisition date fair value which is the sum of the acquisition date fair values of assets transferred by the Group, liabilities assumed by the Group to the former owners of the acquiree and the equity interests issued by the Group in exchange for control of the acquiree. For each business combination, the Group elects whether to measure the non-controlling interests in the acquiree that are present ownership interests and entitle their holders to a proportionate share of net assets in the event of liquidation at fair value or at the proportionate share of the acquiree's identifiable net assets. All other components of non-controlling interests are measured at fair value. Acquisition-related costs are expensed as incurred.

The Group determines that it has acquired a business when the acquired set of activities and assets includes an input and a substantive process that together significantly contribute to the ability to create outputs.

3. 主要會計政策摘要*(續)*

業務合併及商譽*(續)*

當本集團收購業務時，須根據合約條款、收購日期之經濟環境及相關條件對所承擔金融資產及負債進行評估，以適當分類及確認，包括將嵌入式衍生工具與被收購方主合約分開。

倘業務合併分階段進行，先前持有之股本權益應按收購日期公平值重新計量，而任何因此產生的收益或虧損將於收益表中確認。

收購方將轉讓之任何或然代價於收購日期按公平值確認。分類為資產或負債的或然代價均以公平值計量，而公平值變動將於收益表中確認。分類為權益的或然代價將不會重新計量，且其後結清於權益中入賬。

商譽按成本進行初始計量，即已轉讓代價、非控股權益之確認金額及本集團先前所持於被收購方之股本權益公平值總額超出所收購可識別資產及所承擔負債之差額。倘總代價及其他項目之總和低於所收購資產淨值之公平值，則於重新評估後之差額會於收益表確認為廉價購買時之收益。

3. SUMMARY OF SIGNIFICANT ACCOUNTING POLICIES *(continued)*

Business combinations and goodwill *(continued)*

When the Group acquires a business, it assesses the financial assets and liabilities assumed for appropriate classification and designation in accordance with the contractual terms, economic circumstances and pertinent conditions as at the acquisition date. This includes the separation of embedded derivatives in host contracts of the acquiree.

If the business combination is achieved in stages, the previously held equity interest is remeasured at its acquisition date fair value and any resulting gain or loss is recognized in the income statement.

Any contingent consideration to be transferred by the acquirer is recognized at fair value at the acquisition date. Contingent consideration classified as an asset or liability is measured at fair value with changes in fair value recognized in the income statement. Contingent consideration that is classified as equity is not remeasured and subsequent settlement is accounted for within equity.

Goodwill is initially measured at cost, being the excess of the aggregate of the consideration transferred, the amount recognized for non-controlling interests and any fair value of the Group's previously held equity interests in the acquiree over the identifiable assets acquired and liabilities assumed. If the sum of this consideration and other items is lower than the fair value of the net assets acquired, the difference is, after reassessment, recognized in the income statement as a gain on bargain purchase.

3. 主要會計政策摘要*(續)*

業務合併及商譽*(續)*

初始確認後，商譽按成本減累計減值虧損計量。商譽每年就減值進行檢討，倘有事件或情況變化顯示賬面值可能出現減值跡象，則進行更為頻密之檢討。本集團於三月三十一日進行年度商譽減值測試。就減值測試而言，業務合併中購入之商譽由收購日期起，被分配到預期將從合併之協同效應中受益之本集團各現金產生單位，不論本集團之其他資產或負債是否被分配至該等單位或單位組別。

減值按對與商譽有關之現金產生單位(現金產生單位組別)可收回金額進行之評估釐定。倘現金產生單位(現金產生單位組別)之可收回金額少於其賬面值，則確認減值虧損。就商譽確認之減值虧損不會於隨後期間撥回。

當商譽分配至現金產生單位(或現金產生單位組別)及出售該單位之某部分業務，則於釐定出售業務之收益或虧損時，與出售業務相關之商譽將包括在該業務之賬面值內。在此情況下出售之商譽將以出售業務和保留之現金產生單位部分相對價值為基礎作計量。

3. SUMMARY OF SIGNIFICANT ACCOUNTING POLICIES *(continued)*

Business combinations and goodwill *(continued)*

After initial recognition, goodwill is measured at cost less any accumulated impairment losses. Goodwill is tested for impairment annually or more frequently if events or changes in circumstances indicate that the carrying value may be impaired. The Group performs its annual impairment test of goodwill as at 31 March. For the purpose of impairment testing, goodwill acquired in a business combination is, from the acquisition date, allocated to each of the Group's cash-generating units that are expected to benefit from the synergy of the combination, irrespective of whether other assets or liabilities of the Group are assigned to those units or groups of units.

Impairment is determined by assessing the recoverable amount of the cash-generating unit (group of cash-generating units) to which the goodwill relates. Where the recoverable amount of the cash-generating unit (group of cash-generating units) is less than the carrying amount, an impairment loss is recognized. An impairment loss recognized for goodwill is not reversed in a subsequent period.

Where goodwill has been allocated to a cash-generating unit (or group of cash-generating units) and part of the operation within that unit is disposed of, the goodwill associated with the operation disposed of is included in the carrying amount of the operation when determining the gain or loss on the disposal. Goodwill disposed of in these circumstances is measured based on the relative value of the operation disposed of and the portion of the cash-generating unit retained.

3. 主要會計政策摘要*(續)*

公平值計量

本集團於各報告期末按公平值計量投資物業。公平值為於計量日期於與市場參與者之有序交易中因出售資產而收取或因轉讓負債而支付之價格。公平值計量乃基於假設出售資產或轉讓負債之交易於資產或負債之主要市場發生，或如並無主要市場，則於資產或負債之最有利之市場發生。主要或最有利市場須為本集團可進入之市場。資產或負債之公平值乃使用市場參與者會於行使最佳經濟利益對資產或負債進行定價時所使用之假設予以計量。

非金融資產之公平值計量計及市場參與者以最佳方式動用資產或向會以最佳方式動用資產之其他市場參與者出售有關資產，以產生經濟利益之能力。

本集團針對具體情況使用不同估值方法，確保有足夠數據計量公平值，並儘可能利用有關可觀察輸入值及減少使用不可觀察輸入值。

3. SUMMARY OF SIGNIFICANT ACCOUNTING POLICIES *(continued)*

Fair value measurement

The Group measures its investment properties at fair value at the end of each reporting period. Fair value is the price that would be received to sell an asset or paid to transfer a liability in an orderly transaction between market participants at the measurement date. The fair value measurement is based on the presumption that the transaction to sell the asset or transfer the liability takes place either in the principal market for the asset or liability, or in the absence of a principal market, in the most advantageous market for the asset or liability. The principal or the most advantageous market must be accessible by the Group. The fair value of an asset or a liability is measured using the assumptions that market participants would use when pricing the asset or liability, assuming that market participants act in their economic best interest.

A fair value measurement of a non-financial asset takes into account a market participant's ability to generate economic benefits by using the asset in its highest and best use or by selling it to another market participant that would use the asset in its highest and best use.

The Group uses valuation techniques that are appropriate in the circumstances and for which sufficient data are available to measure fair value, maximizing the use of relevant observable inputs and minimizing the use of unobservable inputs.

3. 主要會計政策摘要*(續)*

公平值計量*(續)*

公平值於財務報表計量或披露之所有資產及負債，乃根據對公平值計量整體而言屬重大之最低層級輸入值分類於公平值層級，載列如下：

第一層 — 基於相同資產或負債於活躍市場之報價(未經調整)

第二層 — 基於對公平值計量而言屬重大之最低層級輸入值可觀察(不論直接或間接)之估值技巧

第三層 — 基於對公平值計量而言屬重大之最低層級輸入值不可觀察之估值技巧

對於按經常性基準於財務報表確認之資產及負債，本集團於各報告期末透過重新評估分類(根據對公平值計量整體而言屬重大之最低層級輸入值)，確定是否於各層級之間發生轉移。

3. SUMMARY OF SIGNIFICANT ACCOUNTING POLICIES *(continued)*

Fair value measurement *(continued)*

All assets and liabilities for which fair value is measured or disclosed in the financial statements are categorized within the fair value hierarchy, described as follows, based on the lowest level input that is significant to the fair value measurement as a whole:

Level 1 – based on quoted prices (unadjusted) in active markets for identical assets or liabilities

Level 2 – based on valuation techniques for which the lowest level input that is significant to the fair value measurement is observable, either directly or indirectly

Level 3 – based on valuation techniques for which the lowest level input that is significant to the fair value measurement is unobservable

For assets and liabilities that are recognized in the financial statements on a recurring basis, the Group determines whether transfers have occurred between levels in the hierarchy by reassessing categorization (based on the lowest level input that is significant to the fair value measurement as a whole) at the end of each reporting period.

3. 主要會計政策摘要*(續)*

非金融資產減值

倘有跡象顯示出現減值或要求就資產進行年度減值測試(存貨、遞延稅項資產、金融資產及投資物業除外)，則會估計該資產的可收回金額。可收回金額按資產或現金產出單位的使用價值或其公平值減處置成本(以較高者為準)，並就個別資產而釐定，除非有關資產並無產生在頗大程度上獨立於其他資產或資產組別的現金流入，在此情況下可收回金額就資產所屬的現金產出單位而釐定。在對現金產出單位進行減值測試時，倘公司資產(如總部大樓)的部分賬面值在合理及一致的基準上進行分配，則將分配至個別現金產出單位，否則將分配至最小現金產出單位組別。

減值虧損僅於資產賬面值超出其可收回金額時予以確認。於評估使用價值時，估計未來現金流量按可反映現時市場評估的貨幣時間值及資產特定風險的除稅前折現率折減至現值。減值虧損於產生期間自收益表中與減值資產功能相符之該等支出類別扣除。減值虧損於其產生期間計入，並於收益表內扣除，除非該資產是以重估值列賬，在此情況下，則減值虧損按該重估資產的有關會計政策入賬。

3. SUMMARY OF SIGNIFICANT ACCOUNTING POLICIES *(continued)*

Impairment of non-financial assets

Where an indication of impairment exists, or when annual impairment testing for an asset is required (other than inventories, deferred tax assets, financial assets and investment properties), the asset's recoverable amount is estimated. An asset's recoverable amount is the higher of the asset's or cash-generating unit's value in use and its fair value less costs of disposal, and is determined for an individual asset, unless the asset does not generate cash inflows that are largely independent of those from other assets or groups of assets, in which case the recoverable amount is determined for the cash-generating unit to which the asset belongs. In testing a cash-generating unit for impairment, a portion of the carrying amount of a corporate asset (e.g., a headquarters building) is allocated to an individual cash-generating unit if it can be allocated on a reasonable and consistent basis or, otherwise, to the smallest group of cash-generating units.

An impairment loss is recognized only if the carrying amount of an asset exceeds its recoverable amount. In assessing value in use, the estimated future cash flows are discounted to their present value using a pre-tax discount rate that reflects current market assessments of the time value of money and the risks specific to the asset. An impairment loss is charged to the income statement in the period in which it arises in those expense categories consistent with the function of the impaired asset. An impairment loss is charged to the income statement in the period in which it arises, unless the asset is carried at a revalued amount, in which case the impairment loss is accounted for in accordance with the relevant accounting policy for that revalued asset.

3. 主要會計政策摘要*(續)*

非金融資產減值*(續)*

於每個報告期末會評定是否有跡象顯示之前已確認的減值虧損不再存在或減少。倘出現該等跡象，則會估計可收回金額。過往確認的資產減值虧損(商譽除外)僅會於用以釐定資產可收回金額的估計改變時撥回，惟撥回後的數額不得高於假設過往年度並無就資產確認減值虧損而應有的賬面值(扣除折舊／攤銷後)。減值虧損的撥回於產生期間計入收益表。

關連人士

一方被視為本集團之關連人士倘若：

(a) 該一方為該名人士家族的人士或直系親屬，而該名人士

(i) 控制或共同控制本集團；

(ii) 對本集團施以重大影響；或

(iii) 為本集團或本集團母公司的主要管理層成員；

或

3. SUMMARY OF SIGNIFICANT ACCOUNTING POLICIES *(continued)*

Impairment of non-financial assets *(continued)*

An assessment is made at the end of each reporting period as to whether there is an indication that previously recognized impairment losses may no longer exist or may have decreased. If such an indication exists, the recoverable amount is estimated. A previously recognized impairment loss of an asset other than goodwill is reversed only if there has been a change in the estimates used to determine the recoverable amount of that asset, but not to an amount higher than the carrying amount that would have been determined (net of any depreciation/amortization) had no impairment loss been recognized for the asset in prior years. A reversal of such an impairment loss is credited to the income statement in the period in which it arises.

Related parties

A party is considered to be related to the Group if:

(a) the party is a person or a close member of that person's family and that person

(i) has control or joint control over the Group;

(ii) has significant influence over the Group; or

(iii) is a member of the key management personnel of the Group or of a parent of the Group;

or

3. 主要會計政策摘要*(續)*

關連人士*(續)*

(b) 該一方為實體，而符合下列任何一項條件：

(i) 該實體與本集團屬同一集團之成員公司；

(ii) 該實體為另實體的聯營公司或合營企業(或另一實體之母公司、附屬公司或同系附屬公司)；

(iii) 該實體及本集團均為同一第三方之合營企業；

(iv) 該實體為第三方實體之合營企業，而另實體為該第三方實體之聯營公司；

(v) 該實體為本集團或一家與本集團有關連之實體就僱員的福利而設的離職後福利計劃；

(vi) 該實體由(a)項所識別人士控制或共同控制；

(vii) 於(a)(i)項所識別人士對實體有重大影響或屬該實體(或該實體的母公司)主要管理人員；及

(viii) 該實體或其所屬集團的任何成員向本集團或本集團的母公司提供主要管理人員服務。

3. SUMMARY OF SIGNIFICANT ACCOUNTING POLICIES *(continued)*

Related parties *(continued)*

(b) the party is an entity where any of the following conditions applies:

(i) the entity and the Group are members of the same group;

(ii) one entity is an associate or joint venture of the other entity (or of a parent, subsidiary or fellow subsidiary of the other entity);

(iii) the entity and the Group are joint ventures of the same third party;

(iv) one entity is a joint venture of a third entity and the other entity is an associate of the third entity;

(v) the entity is a post-employment benefit plan for the benefit of employees of either the Group or an entity related to the Group;

(vi) the entity is controlled or jointly controlled by a person identified in (a);

(vii) a person identified in (a)(i) has significant influence over the entity or is a member of the key management personnel of the entity (or of a parent of the entity); and

(viii) the entity, or any member of a group of which it is a part, provides key management personnel services to the Group or to the parent of the Group.

3. 主要會計政策摘要*(續)*

物業、廠房及設備及折舊

除在建工程以外之物業、廠房及設備乃按成本值減累計折舊及任何減值後入賬。

物業、廠房及設備之成本值包括其購入價及令其達致符合預計用途之操作狀況及付運至使用地點之任何直接應佔費用。在物業、廠房及設備投產後產生之開支，例如維修及保養，通常在產生之期間從收益表中扣除。在符合確認條件之情況下，主要檢修費用將予以資本化，作為一項置換列入資產之賬面值。倘物業、廠房及設備之重要部分需要分期更換，本集團會將該部分確認為擁有特定使用年期及相應地折舊之獨立資產。

折舊乃以直線法按其估計可使用年期將物業、廠房及設備各個項目之成本攤銷至其剩餘價值計算。為此而採用的主要年率如下：

香港之樓宇	–	按租賃年期
香港以外地區之樓宇	–	十五至六十年
廠房、機器、傢俬及其他設備	–	二至十五年

永久業權土地並無作出折舊撥備。

3. SUMMARY OF SIGNIFICANT ACCOUNTING POLICIES *(continued)*

Property, plant and equipment and depreciation

Property, plant and equipment, other than construction in progress, are stated at cost less accumulated depreciation and any impairment losses.

The cost of an item of property, plant and equipment comprises its purchase price and any directly attributable costs of bringing the asset to its working condition and location for its intended use. Expenditure incurred after items of property, plant and equipment have been put into operation, such as repairs and maintenance, is normally charged to the income statement in the period in which it is incurred. In situations where the recognition criteria are satisfied, the expenditure for a major inspection is capitalized in the carrying amount of the asset as a replacement. Where significant parts of property, plant and equipment are required to be replaced at intervals, the Group recognizes such parts as individual assets with specific useful lives and depreciates them accordingly.

Depreciation is calculated on the straight-line basis to write off the cost of each item of property, plant and equipment to its residual value over its estimated useful life. The principal annual rates used for this purpose are as follows:

Buildings in Hong Kong	–	Over the lease terms
Buildings outside Hong Kong	–	15 to 60 years
Plant, machinery, furniture and other equipment	–	2 to 15 years

Freehold land is not depreciated.

3. 主要會計政策摘要*(續)*

物業、廠房及設備及折舊*(續)*

倘若物業、廠房及設備項目之部分具不同的使用期限，該項目之成本按合理基準分配給各部分，其各部分各自計算折舊。

剩餘價值、可使用年期及折舊方法最少於每個財政年度末審閱及在適當時進行調整。

物業、廠房及設備項目包括任何已初始確認之重要部分乃於出售或當預期使用或出售項目將不產生未來經濟利益時終止確認。於終止確認該資產的年度有關出售或棄用所產生的收益或虧損，為其銷售所得淨額與賬面價之差額。

在建工程指在建築中之廠房，按成本值扣除減值列賬及無作出折舊撥備。成本值數額包括在建築工程期間之直接建築費。當工程完成及可供使用後，在建工程將重新適當地按物業、廠房及設備種類分類。

3. SUMMARY OF SIGNIFICANT ACCOUNTING POLICIES *(continued)*

Property, plant and equipment and depreciation *(continued)*

Where parts of an item of property, plant and equipment have different useful lives, the cost of that item is allocated on a reasonable basis among the parts and each part is depreciated separately.

Residual values, useful lives and the depreciation method are reviewed, and adjusted if appropriate, at least at each financial year end.

An item of property, plant and equipment including any significant part initially recognized is derecognized upon disposal or when no future economic benefits are expected from its use or disposal. Any gain or loss on disposal or retirement recognized in the income statement in the year the asset is derecognized is the difference between the net sale proceeds and the carrying amount of the relevant asset.

Construction in progress represents plant under construction, which is stated at cost less any impairment losses, and is not depreciated. Cost comprises the direct costs of construction during the period of construction. Construction in progress is reclassified to the appropriate category of property, plant and equipment when completed and ready for use.

3. 主要會計政策摘要(續)

投資物業

投資物業指持作賺取租金收入及／或資本增值用途，而非用於生產或供應貨品或服務或作行政用途；或作一般業務過程中出售用途的土地及樓宇權益(包括在此情況以外符合投資物業定義的租賃物業持有作為使用權資產)。該等物業初始按成本(包括交易成本)列賬。於初始確認後，投資物業乃按反映報告期末之市況的公平值列賬。

投資物業公平值變動產生之收益或虧損於產生年度計入收益表內。

棄用或出售投資物業產生之任何收益或虧損於棄用或出售年度在收益表內確認。

關於投資物業轉撥為自用物業，該物業就其後會計處理之視作成本，為改變用途當日的公平值。倘本集團佔用的物業由自用物業成為投資物業，則本集團就自用物業將根據「物業、廠房及設備及折舊」所述的政策；及／或就持有為使用權資產的物業將根據「使用權資產」所述的政策，將該物業入賬，直至更改用途該日為止，而該物業的賬面值及公平值於當日的任何差額，則於資產重估儲備內作為變動入賬。

3. SUMMARY OF SIGNIFICANT ACCOUNTING POLICIES *(continued)*

Investment properties

Investment properties are interests in land and buildings (including the leasehold property held as a right-of-use asset which would otherwise meet the definition of an investment property) held to earn rental income and/or for capital appreciation, rather than for use in the production or supply of goods or services or for administrative purposes; or for sale in the ordinary course of business. Such properties are measured initially at cost, including transaction costs. Subsequent to initial recognition, investment properties are stated at fair value, which reflects market conditions at the end of the reporting period.

Gains or losses arising from changes in the fair values of investment properties are included in the income statement in the year in which they arise.

Any gains or losses on the retirement or disposal of an investment property are recognized in the income statement in the year of the retirement or disposal.

For a transfer from investment properties to owner-occupied properties, the deemed cost of a property for subsequent accounting is its fair value at the date of change in use. If a property occupied by the Group as an owner-occupied property becomes an investment property, the Group accounts for such property in accordance with the policy stated under "Property, plant and equipment and depreciation" for owned property and/or accounts for such property in accordance with the policy stated under "Right-of-use assets" for property held as a right-of-use asset up to the date of change in use, and any difference at that date between the carrying amount and the fair value of the property is accounted for as movements in the asset revaluation reserve.

3. 主要會計政策摘要*(續)*

無形資產(商譽除外)

單獨取得的無形資產於初始確認時按成本計量。無形資產的可使用年期評定為有限期或無限期。有限期的無形資產隨後按可使用經濟年期攤銷，於有跡象顯示無形資產可能出現減值時評估減值。有限可使用年期的無形資產的攤銷期及攤銷方法至少於各財政年度末審閱。

技術

購入的技術按成本扣除任何減值虧損列賬，並按五年可使用年期以直線法攤銷。

研究及開發費用

所有研究費用於發生時在收益表中扣除。

集團須展示新產品的研發項目為技術上可行，使該項目的無形資產可以被應用或出售，有意及有能力應用或出售該資產，該資產如何帶來未來經濟利益，有足夠資源完成該資產，以及該研發費用可以可靠地計量，該費用才可資本化及延後列支。否則，產品開發開支於發生時會作列支處理。

3. SUMMARY OF SIGNIFICANT ACCOUNTING POLICIES *(continued)*

Intangible assets (other than goodwill)

Intangible assets acquired separately are measured on initial recognition at cost. The useful lives of intangible assets are assessed to be either finite or indefinite. Intangible assets with finite lives are subsequently amortized over the useful economic life and assessed for impairment whenever there is an indication that the intangible asset may be impaired. The amortization period and the amortization method for an intangible asset with a finite useful life are reviewed at least at each financial year end.

Know-how

Purchased know-how is stated at cost less any impairment losses and is amortized on the straight-line basis over its estimated useful life of 5 years.

Research and development costs

All research costs are charged to the income statement as incurred.

Expenditure incurred on projects to develop new products is capitalized and deferred only when the Group can demonstrate the technical feasibility of completing the intangible asset so that it will be available for use or sale, its intention to complete and its ability to use or sell the asset, how the asset will generate future economic benefits, the availability of resources to complete the project and the ability to measure reliably the expenditure during the development. Product development expenditure which does not meet these criteria is expensed when incurred.

3. 主要會計政策摘要*(續)*

投資及其他金融資產

初始確認及計量

金融資產於初始確認時分類為其後按攤銷成本、按公平值計入其他全面收益及按公平值計入損益計量。

於初始確認時，金融資產分類取決於金融資產的合約現金流量特點及本集團管理該等金融資產的業務模式。除並無重大融資成分或本集團已應用可行權宜方法不調整重大融資成分的影響的應收貿易賬款外，本集團初始按公平值加上(倘金融資產並非按公平值計入損益)交易成本計量金融資產。並無重大融資部分或本集團已應用可行權宜方法的應收貿易賬款按照下文「收益確認」所載政策根據香港財務報告準則第15號釐定的交易價格計量。

為使金融資產按攤銷成本或按公平值計入其他全面收益進行分類及計量，需產生純粹為支付本金及未償還本金利息(純粹為支付本金及利息)的現金流量。具有並非純粹支付本金及利息之現金流量的金融資產進行分類及按公平值計量計入損益，且不論業務模式。

3. SUMMARY OF SIGNIFICANT ACCOUNTING POLICIES *(continued)*

Investments and other financial assets

Initial recognition and measurement

Financial assets are classified, at initial recognition, as subsequently measured at amortized cost, fair value through other comprehensive income, and fair value through profit or loss.

The classification of financial assets at initial recognition depends on the financial asset's contractual cash flow characteristics and the Group's business model for managing them. With the exception of trade receivables that do not contain a significant financing component or for which the Group has applied the practical expedient of not adjusting the effect of a significant financing component, the Group initially measures a financial asset at its fair value, plus in the case of a financial asset not at fair value through profit or loss, transaction costs. Trade receivables that do not contain a significant financing component or for which the Group has applied the practical expedient are measured at the transaction price determined under HKFRS 15 in accordance with the policies set out for "Revenue recognition" below.

In order for a financial asset to be classified and measured at amortized cost or fair value through other comprehensive income, it needs to give rise to cash flows that are solely payments of principal and interest ("SPPI") on the principal amount outstanding. Financial assets with cash flows that are not SPPI are classified and measured at fair value through profit or loss, irrespective of the business model.

3. 主要會計政策摘要*(續)*

投資及其他金融資產*(續)*

初始確認及計量(續)

本集團管理金融資產的業務模式指其如何管理其金融資產以產生現金流量。業務模式確定現金流量是否來自收集合約現金流量、出售金融資產、或兩者兼有。按攤銷成本分類及計量的金融資產乃於一項業務模式中以持有該等金融資產以收取合約現金流量為目標而持有，而按公平值分類及計量計入其他全面收益的金融資產則於一項業務模式中以持作收取合約現金流量及持作出售為目標而持有。並非於上述業務模式中持有的金融資產根據按公平值計量計入損益而分類及計量。

正常情況下買入及出售之金融資產概於交易日(即本集團承諾購買或出售該資產之日期)予以確認。正常情況下買入及出售乃指按照一般市場規定或慣例在一定期間內要求交付資產之金融資產買賣。

後續計量

其後金融資產之計量根據其分類進行，該等金融資產之分類如下：

按攤銷成本計量的金融資產(債務工具)

按攤銷成本計量的金融資產其後使用實際利率方法計量，並可能受減值影響。當資產終止確認、修訂或減值時，收益及虧損於收益表內確認。

3. SUMMARY OF SIGNIFICANT ACCOUNTING POLICIES *(continued)*

Investments and other financial assets *(continued)*

Initial recognition and measurement (continued)

The Group's business model for managing financial assets refers to how it manages its financial assets in order to generate cash flows. The business model determines whether cash flows will result from collecting contractual cash flows, selling the financial assets, or both. Financial assets classified and measured at amortized cost are held within a business model with the objective to hold financial assets in order to collect contractual cash flows, while financial assets classified and measured at fair value through other comprehensive income are held within a business model with the objective of both holding to collect contractual cash flows and selling. Financial assets which are not held within the aforementioned business models are classified and measured at fair value through profit or loss.

All regular way purchases and sales of financial assets are recognized on the trade date, that is, the date that the Group commits to purchase or sell the asset. Regular way purchases or sales are purchases or sales of financial assets that require delivery of assets within the period generally established by regulation or convention in the marketplace.

Subsequent measurement

The subsequent measurement of financial assets depends on their classification as follows:

Financial assets at amortized cost (debt instruments)

Financial assets at amortized cost are subsequently measured using the effective interest method and are subject to impairment. Gains and losses are recognized in the income statement when the asset is derecognized, modified or impaired.

3. 主要會計政策摘要*(續)*

終止確認金融資產

金融資產(或金融資產之一部分或一組相似金融資產之一部分，如適用)主要在下列情況將被終止確認(例如：從本集團之綜合財務狀況表移除)，倘：

- 收取該項資產的所得現金流量之權利經已屆滿；或
- 本集團已將收取該項資產所得現金流量之權利轉讓，但已透過「傳送」安排，將所得現金流量在沒有顯著延緩之情況下，全數付予第三者；及(i)本集團已轉讓該項資產之絕大部分風險及回報；或(ii)本集團並無轉讓或保留該項資產絕大部分風險及回報，但已轉讓該項資產之控制權。

倘本集團已轉讓其收取該項資產所得現金流量之權利或已訂立傳送安排，會評估其有否保留該項資產擁有權的風險及回報，以及其程度。倘其並無轉讓或保留該項資產的絕大部分風險及回報，且並無轉讓該項資產的控制權，本集團繼續按本集團的持續參與程度確認入賬該轉讓資產。於該情況下，本集團亦確認相關負債。已轉讓資產及相關負債乃按反映本集團保留之權利及義務之基準計量。

以對所轉讓資產作出擔保的形式持續涉及的資產按資產原有賬面值與本集團應須償還的最高代價金額兩者的較低者計算。

3. SUMMARY OF SIGNIFICANT ACCOUNTING POLICIES *(continued)*

Derecognition of financial assets

A financial asset (or, where applicable, a part of a financial asset or part of a group of similar financial assets) is primarily derecognized (i.e., removed from the Group's consolidated statement of financial position) when:

- the rights to receive cash flows from the asset have expired; or
- the Group has transferred its rights to receive cash flows from the asset or has assumed an obligation to pay the received cash flows in full without material delay to a third party under a "pass-through" arrangement; and either (i) the Group has transferred substantially all the risks and rewards of the asset, or (ii) the Group has neither transferred nor retained substantially all the risks and rewards of the asset, but has transferred control of the asset.

When the Group has transferred its rights to receive cash flows from an asset or has entered into a pass-through arrangement, it evaluates if, and to what extent, it has retained the risk and rewards of ownership of the asset. When it has neither transferred nor retained substantially all the risks and rewards of the asset nor transferred control of the asset, the Group continues to recognize the transferred asset to the extent of the Group's continuing involvement. In that case, the Group also recognizes an associated liability. The transferred asset and the associated liability are measured on a basis that reflects the rights and obligations that the Group has retained.

Continuing involvement that takes the form of a guarantee over the transferred asset is measured at the lower of the original carrying amount of the asset and the maximum amount of consideration that the Group could be required to repay.

3. 主要會計政策摘要(續)

金融資產減值

本集團就所有並非按公平值計入損益而持有之所有債務工具確認預期信貸虧損(「預期信貸虧損」)撥備。預期信貸虧損乃基於根據合約到期的合約現金流量與本集團預期收取的所有現金流量之間的差額而釐定，並以原實際利率的近似值貼現。預期現金流量將包括出售所持抵押的現金流量或組成合約條款的其他加強信用之物品。

一般方式

預期信貸虧損分兩個階段確認。就自初始確認起未有顯著增加的信貸風險而言，預期信貸虧損提供予由未來十二個月內可能發生違約事件而導致的信貸虧損(十二個月預期信貸虧損)。就自初始確認起經已顯著增加的信貸風險而言，不論何時發生違約，於餘下風險年期內的預期信貸虧損均須計提虧損撥備(全期預期信貸虧損)。

於各報告日期，本集團評估金融工具的信貸風險自初始確認後是否出現顯著增加。作此評估時，本集團比較金融工具於報告日期出現違約的風險與該金融工具於初始確認日期出現違約的風險，並考慮毋須花費不必要成本或精力即可獲得的合理及有理據的資料，包括過往及前瞻性資料。本集團認為，當合約付款逾期超過三十天時，信貸風險即顯著增加。

3. SUMMARY OF SIGNIFICANT ACCOUNTING POLICIES *(continued)*

Impairment of financial assets

The Group recognizes an allowance for expected credit losses ("ECLs") for all debt instruments not held at fair value through profit or loss. ECLs are based on the difference between the contractual cash flows due in accordance with the contract and all the cash flows that the Group expects to receive, discounted at an approximation of the original effective interest rate. The expected cash flows will include cash flows from the sale of collateral held or other credit enhancements that are integral to the contractual terms.

General approach

ECLs are recognized in two stages. For credit exposures for which there has not been a significant increase in credit risk since initial recognition, ECLs are provided for credit losses that result from default events that are possible within the next 12 months (a 12-month ECL). For those credit exposures for which there has been a significant increase in credit risk since initial recognition, a loss allowance is required for credit losses expected over the remaining life of the exposure, irrespective of the timing of the default (a lifetime ECL).

At each reporting date, the Group assesses whether the credit risk on a financial instrument has increased significantly since initial recognition. When making the assessment, the Group compares the risk of a default occurring on the financial instrument as at the reporting date with the risk of a default occurring on the financial instrument as at the date of initial recognition and considers reasonable and supportable information that is available without undue cost or effort, including historical and forward-looking information. The Group considers that there has been a significant increase in credit risk when contractual payments are more than 30 days past due.

3. 主要會計政策摘要(續)

金融資產減值(續)

一般方式(續)

本集團認為，倘合約付款逾期一年，則金融資產視作違約。本集團根據合理及有理據的資料(包括本集團的信貸風險控制慣例及逾期超過九十天之金融資產的過往還款率)，對逾期九十天視作違約的假設作出反駁。然而，在並無計及本集團持有的任何加強信用之物品前，本集團亦可於內部或外部資料顯示本集團不大可能悉數收取尚未償還合約金額時將金融資產視作違約。倘無法合理預期收回合約現金流量，則撇銷金融資產。

按攤銷成本計量之金融資產須根據一般方法進行減值，並於下列計量預期信貸虧損之階段分類，惟如下文所詳述應用簡化方法之應收貿易賬款及應收融資租賃賬款除外。

階段一 — 信貸風險自初始確認以來並無顯著增加，且虧損撥備按等同於十二個月預期信貸虧損之金額計量之金融工具

階段二 — 信貸風險自初始確認以來顯著增加(惟並非已信貸減值之金融資產)，且虧損撥備按等同於全期預期信貸虧損之金額計量之金融工具

階段三 — 於報告日期為已信貸減值(惟並非購買或發起之已信貸減值)，且虧損撥備按等同於全期預期信貸虧損之金額計量之金融資產

3. SUMMARY OF SIGNIFICANT ACCOUNTING POLICIES *(continued)*

Impairment of financial assets *(continued)*

General approach (continued)

The Group considers a financial asset in default when contractual payments are one year past due. The Group has rebutted the 90 days past due presumption of default based on reasonable and supportable information including the Group's credit risk control practices and the historical recovery rate of financial assets over 90 days past due. However, the Group may also consider a financial asset to be in default when internal or external information indicates that the Group is unlikely to receive the outstanding contractual amounts in full before taking into account any credit enhancements held by the Group. A financial asset is written off when there is no reasonable expectation of recovering the contractual cash flows.

Financial assets at amortized cost are subject to impairment under the general approach and they are classified within the following stages for measurement of ECLs except for trade receivables and finance lease receivables which apply the simplified approach as detailed below.

Stage 1 – Financial instruments for which credit risk has not increased significantly since initial recognition and for which the loss allowance is measured at an amount equal to 12-month ECLs

Stage 2 – Financial instruments for which credit risk has increased significantly since initial recognition but that are not credit-impaired financial assets and for which the loss allowance is measured at an amount equal to lifetime ECLs

Stage 3 – Financial assets that are credit-impaired at the reporting date (but that are not purchased or originated credit-impaired) and for which the loss allowance is measured at an amount equal to lifetime ECLs

3. 主要會計政策摘要*(續)*

金融資產減值*(續)*

簡化方式

就不含重大融資部分，或當本集團應用可行權宜方法不調整重大融資部分應收貿易賬款，以及應收融資租賃賬款，本集團應用簡化方式計算預期信貸虧損。根據簡化方法，本集團並無追蹤信貸風險之變動，而是基於各報告日期之全期預期信貸虧損確認虧損撥備。本集團已設立建基於歷史信貸虧損經驗之撥備矩陣，並就債務人及經濟環境特定之前瞻性因素作出調整。

金融負債

初始確認及計量

金融負債於初始確認分類為透過損益賬按公平值列賬之金融負債、貸款及借款或指定於有效對沖中作為對沖工具的衍生工具(視情況而定)。

所有金融負債初始按公平值確認，如屬貸款及借款，則扣除直接應佔之交易成本。

本集團之金融負債包括應付貿易及票據賬款、於其他應付賬款及應計負債內的金融負債、租賃負債以及計息銀行貸款。

3. SUMMARY OF SIGNIFICANT ACCOUNTING POLICIES *(continued)*

Impairment of financial assets *(continued)*

Simplified approach

For trade receivables that do not contain a significant financing component or when the Group applies the practical expedient of not adjusting the effect of a significant financing component, and finance lease receivables, the Group applies the simplified approach in calculating ECLs. Under the simplified approach, the Group does not track changes in credit risk, but instead recognizes a loss allowance based on lifetime ECLs at each reporting date. The Group has established a provision matrix that is based on its historical credit loss experience, adjusted for forward-looking factors specific to the debtors and the economic environment.

Financial liabilities

Initial recognition and measurement

Financial liabilities are classified, at initial recognition, as financial liabilities at fair value through profit or loss, loans and borrowings, or as derivatives designated as hedging instruments in an effective hedge, as appropriate.

All financial liabilities are recognized initially at fair value and, in the case of loans and borrowings, net of directly attributable transaction costs.

The Group's financial liabilities include trade and bills payables, financial liabilities included in other payables and accruals, lease liabilities and interest-bearing bank borrowings.

3. 主要會計政策摘要*(續)*

金融負債*(續)*

後續計量

金融負債之後續計量根據其分類進行，該等金融負債之分類如下：

按攤銷成本計量的金融負債(貸款及借款)

於初始確認後，計息貸款及借款其後以實際利率法按攤銷的成本計價，惟折算之影響並不重大者除外，於該情況下則以成本列賬。

如果負債終止確認以及按實際利率進行攤銷程序時，其損益在收益表內確認。

攤銷後的成本於計入收購之任何折讓或溢價後計算，並包括屬實際利率不可分割部分之費用或成本。實際利率攤銷於收益表內確認。

財務擔保合同

本集團作出之財務擔保合同即要求作出付款以償付持有人因特定債務人未能根據債務工具之條款償還到期款項而招致損失之合同。財務擔保合同初始按其公平值確認為負債(就發出該擔保直接應佔之交易成本進行調整)。初始確認後，本集團按以下兩者中之較高者計量財務擔保合同：(i)根據「金融資產減值」所載政策釐定的預期信貸虧損的撥備；及(ii)初始確認之金額減(倘適用)累計確認收入金額。

3. SUMMARY OF SIGNIFICANT ACCOUNTING POLICIES *(continued)*

Financial liabilities *(continued)*

Subsequent measurement

The subsequent measurement of financial liabilities depends on their classification as follows:

Financial liabilities at amortized cost (loans and borrowings)

After initial recognition, interest-bearing loans and borrowings are subsequently measured at amortized cost, using the effective interest rate method unless the effect of discounting would be immaterial, in which case they are stated at cost.

Gains and losses are recognized in the income statement when the liabilities are derecognized as well as through the effective interest rate amortization process.

Amortized cost is calculated by taking into account any discount or premium on acquisition and fees or costs that are an integral part of the effective interest rate. The effective interest rate amortization is included in the income statement.

Financial guarantee contracts

Financial guarantee contracts issued by the Group are those contracts that require a payment to be made to reimburse the holder for a loss it incurs because the specified debtor fails to make a payment when due in accordance with the terms of a debt instrument. A financial guarantee contract is recognized initially as a liability at its fair value, adjusted for transaction costs that are directly attributable to the issuance of the guarantee. Subsequent to initial recognition, the Group measures the financial guarantee contract at the higher of (i) the ECL allowance determined in accordance with the policy as set out in "Impairment of financial assets"; and (ii) the amount initially recognized less, when appropriate, the cumulative amount of income recognized.

3. 主要會計政策摘要*(續)*

終止確認金融負債

財務負債之責任在已解除或註銷或屆滿時終止確認。

倘現有金融負債為同一貸款人以重大不同條款之負債取代時，或現有負債之條款有重大修改時，有關交換或修改則被視為終止確認原有負債及確認一項新負債，而有關賬面值之差額乃於收益表內確認入賬。

抵銷金融工具

金融資產與金融負債抵銷，而有關淨額當有現時可強制執行之法律權利以抵銷已確認金額且有意按淨額基準結算或變現資產及結清負債時在財務狀況表呈報。

存貨

存貨乃按成本值及可變現淨值之較低者入賬。成本按加權平均法計算，倘為在製品及製成品，則包括直接物料，直接勞工及應分擔之生產費用的部分入賬。可變現淨值乃根據估計售價減去預計直至產品製成及出售貨品所需之任何成本。

3. SUMMARY OF SIGNIFICANT ACCOUNTING POLICIES *(continued)*

Derecognition of financial liabilities

A financial liability is derecognized when the obligation under the liability is discharged or cancelled, or expires.

When an existing financial liability is replaced by another from the same lender on substantially different terms, or the terms of an existing liability are substantially modified, such an exchange or modification is treated as a derecognition of the original liability and a recognition of a new liability, and the difference between the respective carrying amounts is recognized in the income statement.

Offsetting of financial instruments

Financial assets and financial liabilities are offset and the net amount is reported in the statement of financial position if there is a currently enforceable legal right to offset the recognized amounts and there is an intention to settle on a net basis, or to realize the assets and settle the liabilities simultaneously.

Inventories

Inventories are stated at the lower of cost and net realizable value. Cost is determined on the weighted average basis and, in the case of work in progress and finished goods, comprises direct materials, direct labour and an appropriate proportion of overheads. Net realizable value is based on estimated selling prices less any estimated costs to be incurred to completion and disposal.

3. 主要會計政策摘要(續)

現金及現金等價物

就綜合現金流量表而言，現金及現金等價物指現金、銀行結存及活期存款、以及可隨時轉換為已知數額現金，並承受價值變動風險甚微之短期及高度流通性之投資，一般於購入時三個月內到期，扣除須應要求償還之銀行透支，該銀行透支用作為本集團現金管理之一個完整部分。

就綜合財務狀況表而言，現金及銀行結存包括現金、銀行結存及活期存款，其用途並無限制。

撥備

由於過往事件而需要承擔現時責任(法定或推定)，而履行該責任很可能導致資源流出，且責任之金額能夠可靠地估計，則確認撥備。

倘折現影響大，確認為撥備之金額為預期履行該責任所需之未來開支於報告期末之現值。倘由於時間流逝導致已折現現值金額增加，則計入收益表之融資成本內。

本集團就若干產品的銷售提供保證。本集團確認該等保證式保證撥備，乃根據銷售量及過往維修及退貨之情況，(適當地)折現至其現值金額。

3. SUMMARY OF SIGNIFICANT ACCOUNTING POLICIES *(continued)*

Cash and cash equivalents

For the purpose of the consolidated statement of cash flows, cash and cash equivalents comprise cash on hand, bank balances and demand deposits, and short term highly liquid investments that are readily convertible into known amounts of cash, are subject to an insignificant risk of changes in value, and have a short maturity of generally within three months when acquired, less bank overdrafts which are repayable on demand and form an integral part of the Group's cash management.

For the purpose of the consolidated statement of financial position, cash and bank balances comprise cash on hand, bank balances and demand deposits, which are not restricted as to use.

Provisions

A provision is recognized when a present obligation (legal or constructive) has arisen as a result of a past event and it is probable that a future outflow of resources will be required to settle the obligation, provided that a reliable estimate can be made of the amount of the obligation.

When the effect of discounting is material, the amount recognized for a provision is the present value at the end of the reporting period of the future expenditures expected to be required to settle the obligation. The increase in the discounted present value amount arising from the passage of time is included in finance costs in the income statement.

The Group provides for warranties in relation to the sale of certain products. Provisions for these assurance-type warranties granted by the Group are recognized based on sales volume and past experience of the level of repairs and returns, discounted to their present values as appropriate.

3. 主要會計政策摘要*(續)*

所得稅

所得稅包括當期及遞延稅項。與於收益表以外確認項目有關之所得稅在其他全面收益或直接於權益內確認。

即期稅務資產及負債以預期可退回或支付予稅務機關的金額計量，根據報告期末已頒布或實際頒布之稅率(及稅務法例)推算，並計及詮釋及本集團經營所在國家之現行慣例。

在報告期末時，資產與負債的稅基與其在財政報告的賬面值之間的所有暫時性差異，按負債法計提遞延稅項撥備。

所有應課稅暫時性差異均會確認為遞延稅項負債，惟：

- 倘若遞延稅項負債的起因，是由一宗非屬企業合併的交易中初始確認之資產或負債，與及在交易時，對會計溢利或應課稅溢利或虧損均無影響，則屬例外；及
- 對於涉及附屬公司及聯營公司之投資的應課稅暫時性差異而言，倘若撥回暫時性差異的時間可以控制，以及該暫時性差異可能不會在可見將來撥回，則屬例外。

3. SUMMARY OF SIGNIFICANT ACCOUNTING POLICIES *(continued)*

Income tax

Income tax comprises current and deferred tax. Income tax relating to items recognized outside the income statement is recognized in other comprehensive income or directly in equity.

Current tax assets and liabilities are measured at the amount expected to be recovered from or paid to the taxation authorities, based on tax rates (and tax laws) that have been enacted or substantively enacted by the end of the reporting period, taking into consideration interpretations and practices prevailing in the countries in which the Group operates.

Deferred tax is provided, using the liability method, on all temporary differences at the end of the reporting period between the tax bases of assets and liabilities and their carrying amounts for financial reporting purposes.

Deferred tax liabilities are recognized for all taxable temporary differences, except:

- when the deferred tax liability arises from the initial recognition of an asset or liability in a transaction that is not a business combination and, at the time of the transaction, affects neither the accounting profit nor taxable profit or loss; and
- in respect of taxable temporary differences associated with investments in subsidiaries and associates, when the timing of the reversal of the temporary differences can be controlled and it is probable that the temporary differences will not reverse in the foreseeable future.

3. 主要會計政策摘要*(續)*

所得稅*(續)*

所有可扣減暫時性差異，及未被動用稅項抵免與任何未被動用稅項虧損結轉，均確認為遞延稅項資產。若日後有可能出現應課稅溢利，可用以抵扣該等可扣減暫時性差異、以及未被動用稅項抵免及未被動用稅項虧損結轉，則遞延稅項資產方會確認入賬，惟：

- 倘若有關可扣減暫時性差異的遞延稅項資產的起因，是由一宗非屬企業合併的交易中初始確認資產或負債，而且在交易時，對會計溢利或應課稅溢利或虧損均無影響，則屬例外；及

- 對於涉及附屬公司及聯營公司之投資的可扣減暫時性差異而言，只有在暫時性差異有可能在可見將來撥回，而且日後有可能出現應課稅溢利，可用以抵扣該等暫時性差異時，方會確認遞延稅項資產。

遞延稅項資產的賬面值，在每個報告期末予以評估。若不再可能有足夠應課稅溢利用以抵扣相關稅項資產的全部或部分，則扣減遞延稅項資產賬面值。在可能有足夠應課稅溢利用以抵扣相關稅項資產的全部或部分時，則在每個報告期末確認過往不予確認的遞延稅項資產。

3. SUMMARY OF SIGNIFICANT ACCOUNTING POLICIES *(continued)*

Income tax *(continued)*

Deferred tax assets are recognized for all deductible temporary differences, and the carryforward of unused tax credits and any unused tax losses. Deferred tax assets are recognized to the extent that it is probable that taxable profit will be available against which the deductible temporary differences, and the carryforward of unused tax credits and unused tax losses can be utilized, except:

- when the deferred tax asset relating to the deductible temporary differences arises from the initial recognition of an asset or liability in a transaction that is not a business combination and, at the time of the transaction, affects neither the accounting profit nor taxable profit or loss; and

- in respect of deductible temporary differences associated with investments in subsidiaries and associates, deferred tax assets are only recognized to the extent that it is probable that the temporary differences will reverse in the foreseeable future and taxable profit will be available against which the temporary differences can be utilized.

The carrying amount of deferred tax assets is reviewed at the end of each reporting period and reduced to the extent that it is no longer probable that sufficient taxable profit will be available to allow all or part of the deferred tax asset to be utilized. Unrecognized deferred tax assets are reassessed at the end of each reporting period and are recognized to the extent that it has become probable that sufficient taxable profit will be available to allow all or part of the deferred tax asset to be recovered.

3. 主要會計政策摘要*(續)*

所得稅*(續)*

變現資產或清償負債的期間預期適用的稅率，會用作衡量遞延稅項資產及負債，並以報告期末當日已經生效或大致上已經生效的稅率(及稅法)為基準。

僅當本集團有可合法執行權利可將即期稅項資產與即期稅項負債抵銷，且遞延稅項資產與遞延稅項負債與同一稅務機關對同一應稅實體或於各未來期間預期有大額遞延稅項負債或資產需要結算或清償時，擬按淨額基準結算即期稅務負債及資產或同時變現資產及結算負債之不同稅務實體徵收之所得稅相關，則遞延稅項資產與遞延稅項負債可予抵銷。

政府補助款

政府補助款乃於合理確定將會取得該筆補助款及符合所有附帶條件時按公平值確認。當該補助款與開支項目有關時，補助款須有系統地與其擬補償的成本支銷期間內確認為收入。如補助款涉及一項資產，則公平值會計入遞延收入賬，並按有關資產之預期使用年期以每年均等額轉撥至收益表。

3. SUMMARY OF SIGNIFICANT ACCOUNTING POLICIES *(continued)*

Income tax *(continued)*

Deferred tax assets and liabilities are measured at the tax rates that are expected to apply to the period when the asset is realized or the liability is settled, based on tax rates (and tax laws) that have been enacted or substantively enacted by the end of the reporting period.

Deferred tax assets and deferred tax liabilities are offset if and only if the Group has a legally enforceable right to set off current tax assets and current tax liabilities and the deferred tax assets and deferred tax liabilities relate to income taxes levied by the same taxation authority on either the same taxable entity or different taxable entities which intend either to settle current tax liabilities and assets on a net basis, or to realize the assets and settle the liabilities simultaneously, in each future period in which significant amounts of deferred tax liabilities or assets are expected to be settled or recovered.

Government grants

Government grants are recognized at their fair value where there is reasonable assurance that the grant will be received and all attaching conditions will be complied with. When the grant relates to an expense item, it is recognized as income on a systematic basis over the periods that the costs, for which it is intended to compensate, are expensed. Where the grant relates to an asset, the fair value is credited to a deferred income account and is released to the income statement over the expected useful life of the relevant asset by equal annual installments.

3. 主要會計政策摘要*(續)*

收益確認

來自客戶合約之收益

來自客戶合約之收益在貨品轉移至客戶時按反映本集團就交換該等貨品而預期有權換取之代價金額確認。

當合約包含融資部分，就貨品轉移予客戶而為客戶提供重大利益超過一年時，收益按應收金額現值計量，使用合約開始時在本集團與客戶之間訂立的獨立融資交易中反映的貼現率貼現。當合約包含為本集團提供超過一年的重大財務利益的融資部分時，根據合約確認的收益包括根據實際利率法計算的合約負債所附加的利息開支。對於客戶付款與承諾貨品轉移之間的期限為一年或不足一年的合約，交易價格根據香港財務報告準則第15號應用可行權宜方式就重大融資部分的影響不進行調整。此外，倘本集團確認之資產攤銷期為一年或不足一年，本集團已選擇應用可行權宜方法將獲取合同的增量成本於發生時確認為支出。

來自銷售貨品的收益於資產的控制權轉移至客戶時(一般在交付貨品時)確認。

3. SUMMARY OF SIGNIFICANT ACCOUNTING POLICIES *(continued)*

Revenue recognition

Revenue from contracts with customers

Revenue from contracts with customers is recognized when control of goods is transferred to the customers at an amount that reflects the consideration to which the Group expects to be entitled in exchange for those goods.

When the contract contains a financing component which provides the customer with a significant benefit of financing the transfer of goods to the customer for more than one year, revenue is measured at the present value of the amount receivable, discounted using the discount rate that would be reflected in a separate financing transaction between the Group and the customer at contract inception. When the contract contains a financing component which provides the Group with a significant financial benefit for more than one year, revenue recognized under the contract includes the interest expense accreted on the contract liability under the effective interest method. For a contract where the period between the payment by the customer and the transfer of the promised goods is one year or less, the transaction price is not adjusted for the effects of a significant financing component, using the practical expedient in HKFRS 15. Furthermore, the Group has elected to apply the practical expedient to recognize the incremental costs of obtaining a contract as an expense when incurred if the amortization period of the asset that the Group otherwise would have recognized is one year or less.

Revenue from the sale of goods is recognized at the point in time when control of the asset is transferred to the customer, generally on delivery of the goods.

3. 主要會計政策摘要*(續)*

收益確認*(續)*

其他收入

利息收入利用實際利率法以應計基準確認，所用利率為於金融工具之預期年期或更短期間(如適用)內將估計未來現金收款準確折現至金融資產賬面淨額之利率。

租金收入於租賃年期內按時間比例基準確認。

融資租賃利息收入利用實際利率法以應計基準確認，所用利率為於融資租賃的淨投資之預期年期或更短期間(如適用)內將估計未來現金收款準確折現至融資租賃的淨投資賬面淨額之利率。

合約負債

合約負債於本集團轉移相關貨品或服務之前收到客戶付款或有關款項到期(以較早者為準)時確認。合約負債於本集團履行合約(即轉讓相關貨品或服務的控制權予客戶)時確認為收益。

3. SUMMARY OF SIGNIFICANT ACCOUNTING POLICIES *(continued)*

Revenue recognition *(continued)*

Other income

Interest income is recognized on an accrual basis using the effective interest method by applying the rate that exactly discounts the estimated future cash receipts over the expected life of the financial instrument or a shorter period, when appropriate, to the net carrying amount of the financial asset.

Rental income is recognized on a time proportion basis over the lease term.

Finance lease interest income is recognized on an accrual basis using the effective interest method by applying the rate that exactly discounts the estimated future cash receipts over the expected life of the net investment of the finance lease or a shorter period, when appropriate, to the net carrying amount of the net investment of the finance lease.

Contract liabilities

A contract liability is recognized when a payment is received or a payment is due (whichever is earlier) from a customer before the Group transfers the related goods or services. Contract liabilities are recognized as revenue when the Group performs under the contract (i.e., transfers control of the related goods or services to the customer).

3. 主要會計政策摘要*(續)*

租賃

本集團於合同開始時評估合同是否屬於或包含租賃。倘合同授予權利以代價為換取在一段時間內控制已識別資產的使用，則該合同屬於或包含租賃。

本集團作為承租人

本集團對所有租賃(惟短期租賃及低價值資產租賃除外)採取單一確認及計量方法。本集團確認租賃負債以作出租賃款項，而使用權資產指使用相關資產的權利。

(a) 使用權資產

使用權資產於租賃開始日期(即相關資產可供使用日期)確認。使用權資產按成本減任何累計折舊及任何減值虧損計量，並就重新計量租賃負債作出調整。使用權資產的成本包括已確認的租賃負債金額、已產生的初始直接成本，以及於開始日期或之前作出的租賃款減已收取的任何租賃優惠。使用權資產的成本亦包括拆除及移除相關資產或還原相關資產或其位處的場地之估計成本(如適用)。使用權資產在租期及估計可使用年期(以較短者為準)內按直線法計提折舊如下：

租賃土地	五十至五十二年
物業	二至七年
汽車	二年

倘使用權資產符合投資物業的定義，則計入投資物業。相應使用權資產初始按成本計量，其後根據本集團「投資物業」政策按公平值計量。

3. SUMMARY OF SIGNIFICANT ACCOUNTING POLICIES *(continued)*

Leases

The Group assesses at contract inception whether a contract is, or contains, a lease. A contract is, or contains, a lease if the contract conveys the right to control the use of an identified asset for a period of time in exchange for consideration.

Group as a lessee

The Group applies a single recognition and measurement approach for all leases, except for short-term leases and leases of low-value assets. The Group recognizes lease liabilities to make lease payments and right-of-use assets representing the right to use the underlying assets.

(a) Right-of-use assets

Right-of-use assets are recognized at the commencement date of the lease (that is the date the underlying asset is available for use). Right-of-use assets are measured at cost, less any accumulated depreciation and any impairment losses, and adjusted for any remeasurement of lease liabilities. The cost of right-of-use assets includes the amount of lease liabilities recognized, initial direct costs incurred, and lease payments made at or before the commencement date less any lease incentives received. Where applicable, the cost of a right-of-use asset also includes an estimate of costs to dismantle and remove the underlying asset or to restore the underlying asset or the site on which it is located. Right-of-use assets are depreciated on a straight-line basis over the shorter of the lease terms and the estimated useful lives of the assets as follows:

Leasehold land	50 to 52 years
Properties	2 to 7 years
Motor vehicles	2 years

When a right-of-use asset meets the definition of investment property, it is included in investment properties. The corresponding right-of-use asset is initially measured at cost, and subsequently measured at fair value, in accordance with the Group's policy for "Investment properties".

3. 主要會計政策摘要*(續)*

租賃*(續)*

本集團作為承租人(續)

(b) 租賃負債

租賃負債於租賃開始日期按租期內作出的租賃款的現值予以確認。租賃款包括固定款項(包括實質固定款項)減任何應收租賃優惠。

於計算租賃款的現值時，倘租賃內所隱含的利率不易釐定，則本集團應用租賃開始日期的增量借款利率計算。於開始日期後，租賃負債金額的增加反映利息的增加，並因支付租賃款項而減少。此外，如租期有任何修改、變化、租賃款項變化(例如租賃款日後因指數或利率變動而出現變動)或購買相關資產的選擇權評估有變，則重新計量租賃負債的賬面值。

(c) 短期租賃及低價值資產租賃

本集團對其物業的短期租賃(即租期為開始日期起計十二個月或以內且不包含購買選擇權的租賃)應用短期租賃確認豁免。其亦將低價值資產租賃的確認豁免應用予被視為低價值的辦公室設備的租賃。

短期租賃及低價值資產租賃的租賃款在租期內按直線法確認為支出。

3. SUMMARY OF SIGNIFICANT ACCOUNTING POLICIES *(continued)*

Leases *(continued)*

Group as a lessee (continued)

(b) Lease liabilities

Lease liabilities are recognized at the commencement date of the lease at the present value of lease payments to be made over the lease term. The lease payments include fixed payments (including in-substance fixed payments) less any lease incentives receivable.

In calculating the present value of lease payments, the Group uses its incremental borrowing rate at the lease commencement date because the interest rate implicit in the lease is not readily determinable. After the commencement date, the amount of lease liabilities is increased to reflect the accretion of interest and reduced for the lease payments made. In addition, the carrying amount of lease liabilities is remeasured if there is a modification, a change in the lease term, a change in lease payments (e.g., a change to future lease payments resulting from a change in an index or rate) or a change in assessment of an option to purchase the underlying asset.

(c) Short-term leases and leases of low-value assets

The Group applies the short-term lease recognition exemption to its short-term leases of properties (that is those leases that have a lease term of 12 months or less from the commencement date and do not contain a purchase option). It also applies the recognition exemption for leases of low-value assets to leases of office equipment that are considered to be of low value.

Lease payments on short-term leases and leases of low-value assets are recognized as an expense on a straight-line basis over the lease term.

3. 主要會計政策摘要*(續)*

租賃*(續)*

本集團作為出租人

本集團作為出租人時，於租賃開始(或租賃變更)時將其每項租賃分類為經營租賃或融資租賃。

本集團並未轉移資產擁有權所附帶的絕大部分風險與回報的租賃歸類為經營租賃。租金收入於租期內按直線法列賬並計入收益表的其他收入。

將相關資產擁有權所附帶的絕大部分風險與回報轉移予承租人的租賃，入賬列作融資租賃。於開始日期，租賃資產的成本按租賃款及相關款項的現值(包括初始直接成本)資本化，及以應收款列示，金額相等於租賃的淨投資。於租賃的淨投資之融資收入按租期內之每期間之固定回報率自收益表中確認。

借貸成本

收購、建造或生產合資格資產(即須花費長時間以達致擬定用途或出售之資產)之直接應佔借貸成本，乃予以資本化作為該等資產之成本部分。該借貸成本於有關資產大致可作擬定用途或出售時停止撥作資本。特定借貸作合資格資產開支因等待作臨時投資而賺取的投資收入須從資本化的借貸成本中扣除。所有其他借貸成本均於產生期間支銷。借貸成本包括實體所產生與借款有關之利息及其他成本。

3. SUMMARY OF SIGNIFICANT ACCOUNTING POLICIES *(continued)*

Leases *(continued)*

Group as a lessor

When the Group acts as a lessor, it classifies at lease inception (or when there is a lease modification) each of its leases as either an operating lease or a finance lease.

Leases in which the Group does not transfer substantially all the risks and rewards incidental to ownership of an asset are classified as operating leases. Rental income is accounted for on a straight-line basis over the lease terms and is included in other income in the income statement.

Leases that transfer substantially all the risks and rewards incidental to ownership of an underlying asset to the lessee are accounted for as finance leases. At the commencement date, the cost of the leased asset is capitalized at the present value of the lease payments and related payments (including the initial direct costs), and presented as a receivable at an amount equal to the net investment in the lease. The finance income on the net investment in the lease is recognized in the income statement so as to provide a constant periodic rate of return over the lease terms.

Borrowing costs

Borrowing costs directly attributable to the acquisition, construction or production of qualifying assets, i.e., assets that necessarily take a substantial period of time to get ready for their intended use or sale, are capitalized as part of the cost of those assets. The capitalization of such borrowing costs ceases when the assets are substantially ready for their intended use or sale. Investment income earned on the temporary investment of specific borrowings pending their expenditure on qualifying assets is deducted from the borrowing costs capitalized. All other borrowing costs are expensed in the period in which they are incurred. Borrowing costs consist of interest and other costs that an entity incurs in connection with the borrowing of funds.

3. 主要會計政策摘要(續)

外幣

該等財務報表以港元(乃本公司之功能貨幣)呈列。本集團屬下各公司自行決定其功能貨幣，而各公司的財務報表內之項目均以該功能貨幣計算。本集團屬下各公司列賬之外幣交易首先按交易日期之功能貨幣匯率入賬。於報告期末以外幣為單位之貨幣資產與負債按該日之功能貨幣匯率重新換算。因貨幣結算或換算引起之差額於收益表內確認。根據外幣歷史成本計算之非貨幣項目按初始交易日期之匯率換算。根據外幣公平值計算之非貨幣項目按釐定公平值當日之匯率計算。重新換算按公平值計量之非貨幣項目產生之收益或虧損，按確認該項目的公平值變動之收益或虧損一致之方式處理(即公平值收益或虧損於其他全面收益或收益表內確認之項目之匯兑差額亦分別於其他全面收益或收益表內確認)。

為釐定終止確認與預付代價有關的非貨幣資產或非貨幣負債時的相關資產、開支或收入的初始確認匯率，初始交易日期為本集團初始確認因預付代價而產生非貨幣資產或非貨幣負債的日期。倘存在多次付款或預收款項，本集團釐定預付代價各付款或收款交易日期。

3. SUMMARY OF SIGNIFICANT ACCOUNTING POLICIES *(continued)*

Foreign currencies

These financial statements are presented in Hong Kong dollars, which is the Company's functional currency. Each entity in the Group determines its own functional currency and items included in the financial statements of each entity are measured using that functional currency. Foreign currency transactions recorded by the entities in the Group are initially recorded using their respective functional currency rates prevailing at the dates of the transactions. Monetary assets and liabilities denominated in foreign currencies are translated at the functional currency rates of exchange ruling at the end of the reporting period. Differences arising on settlement or translation of monetary items are recognized in the income statement. Non-monetary items that are measured in terms of historical cost in a foreign currency are translated using the exchange rates at the dates of the initial transactions. Non-monetary items measured at fair value in a foreign currency are translated using the exchange rates at the date when the fair value was measured. The gain or loss arising on translation of a non-monetary item measured at fair value is treated in line with the recognition of the gain or loss on change in fair value of the item (i.e., translation differences on the item whose fair value gain or loss is recognized in other comprehensive income or the income statement is also recognized in other comprehensive income or the income statement, respectively).

In determining the exchange rate on initial recognition of the related asset, expense or income on the derecognition of a non-monetary asset or non-monetary liability relating to an advance consideration, the date of initial transaction is the date on which the Group initially recognizes the non-monetary asset or non-monetary liability arising from the advance consideration. If there are multiple payments or receipts in advance, the Group determines the transaction date for each payment or receipt of the advance consideration.

3. 主要會計政策摘要*(續)*

外幣*(續)*

若干海外附屬公司、及聯營公司之功能貨幣並非港元。於報告期末，該等公司之資產及負債均按報告期末之匯率換算為港元，而該等公司之收益表按與交易日期之現行匯率相若之匯率換算為港元。匯率差異計入其他全面收益，並於匯兑變動儲備累計。於出售外地營運時，就特定外地營運之其他全面收入部分將於收益表確認。

就綜合現金流量表而言，海外附屬公司之現金流量按有關日期之匯率換算為港元。海外附屬公司年內經常產生之現金流量按年內之加權平均匯率換算為港元。

僱員福利

(a) 退休金計劃

本集團根據強制性公積金計劃條例設立定額供款之強制性公積金退休福利計劃(「強積金計劃」)予合資格參與該強積金計劃之僱員。供款乃按僱員底薪之若干百分比計算，並於根據強積金計劃之規則應予支付時計入收益表。強積金計劃之資產乃獨立於本集團之資產，並由獨立管理之基金另行持有。本集團之僱主供款於強積金計劃供款後全數歸屬僱員。

3. SUMMARY OF SIGNIFICANT ACCOUNTING POLICIES *(continued)*

Foreign currencies *(continued)*

The functional currencies of certain overseas subsidiaries and associates are currencies other than the Hong Kong dollar. As at the end of the reporting period, the assets and liabilities of these entities are translated into Hong Kong dollars at the exchange rates prevailing at the end of the reporting period and their income statements are translated into Hong Kong dollars at the exchange rates that approximate to those prevailing at the dates of the transactions. The resulting exchange differences are recognized in other comprehensive income and accumulated in the exchange fluctuation reserve. On disposal of a foreign operation, the component of other comprehensive income relating to that particular foreign operation is recognized in the income statement.

For the purpose of the consolidated statement of cash flows, the cash flows of overseas subsidiaries are translated into Hong Kong dollars at the exchange rates ruling at the dates of the cash flows. Frequently recurring cash flows of overseas subsidiaries which arise throughout the year are translated into Hong Kong dollars at the weighted average exchange rates for the year.

Employee benefits

(a) Pension schemes

The Group operates a defined contribution Mandatory Provident Fund retirement benefit scheme (the "MPF Scheme") under the Mandatory Provident Fund Schemes Ordinance, for those employees who are eligible to participate in the MPF Scheme. Contributions are made based on a certain percentage of the employees' basic salaries and are charged to the income statement as they become payable in accordance with the rules of the MPF Scheme. The assets of the MPF Scheme are held separately from those of the Group in an independently administered fund. The Group's employer contributions vest fully with the employees when contributed into the MPF Scheme.

3. 主要會計政策摘要*(續)*

僱員福利*(續)*

(a) 退休金計劃(續)

強積金計劃生效前，本集團曾設立一個定額供款退休福利計劃(「退休計劃」)，供合資格及選擇參與該計劃之僱員參加。退休計劃與強積金計劃之運作方式相近，惟倘僱員於有權全數收取本集團之僱主供款以前離職，本集團繼後應付之供款可以從遭放棄之有關款項扣減。

本集團在中國大陸附屬公司之僱員須參與地方市政府所管理之中央退休金計劃(「中央計劃」)。該等附屬公司須根據其僱員之薪金若干百分比計算，在按中央計劃規定之支付日期向該中央計劃支付供款額，並在有關之期間從收益表中扣除。

根據台灣勞動基準法所要求，本集團在台灣之附屬公司設立一項撥款定額福利退休金計劃(「舊計劃」)，並須每月向該退休準備金供款，為僱員提供退休及終止服務之福利。該退休準備金由勞工退休準備金監督委員會(「委員會」)管理，並以委員會之名義存入一間經政府批准擔當信託人之金融機構。定額福利計劃的退休金福利成本，乃採用預計單位基數精算估值法計算。

3. SUMMARY OF SIGNIFICANT ACCOUNTING POLICIES *(continued)*

Employee benefits *(continued)*

(a) Pension schemes (continued)

Prior to the MPF Scheme becoming effective, the Group operated a defined contribution retirement benefit scheme (the "DCRB Scheme") for those employees who were eligible and had elected to participate in the DCRB Scheme. The DCRB Scheme operates in a similar way to the MPF Scheme, except that when an employee leaves the Group prior to his/her interest in the DCRB Scheme vesting fully, the ongoing contributions payable by the Group would be reduced by the relevant amount of the forfeited employer contributions.

The employees of the Group's subsidiaries in Mainland China are required to participate in a central pension scheme (the "Central Scheme") which is operated by the local municipal government. The contributions payable by these subsidiaries to the Central Scheme, which are based on a certain percentage of the salaries of their employees, are charged to the income statement as they become payable in accordance with the rules of the Central Scheme.

As required by the Taiwanese Labour Standard Law, the Group's subsidiaries in Taiwan operate a funded defined benefit pension scheme (the "Old Scheme") and make monthly contributions to the retirement fund to meet employees' retirement and termination benefits entitlements. The fund is administered by the Employees' Retirement Fund Committee (the "Committee") and is deposited under the Committee's name with a government approved financial institution, which acts as the trustee. The cost of providing pension benefits under the defined benefit plan is determined using the projected unit credit actuarial valuation method.

3. 主要會計政策摘要*(續)*

僱員福利*(續)*

(a) 退休金計劃(續)

舊計劃所產生之重新計量(包括精算收益及虧損、資產上限之影響(不包括定額福利負債的利息淨額)及計劃資產回報(不包括定額福利負債的利息淨額)),乃即時確認於綜合財務狀況表內,有關計入或扣除自保留溢利之款項於發生期間確認於其他全面收益。重新計量概不於隨後期間重新分類至收益表。

過往服務成本乃於以下日期(以較早者為準)確認於收益表內:

- 計劃修訂或裁減之日;及
- 本集團確認架構重整相關成本之日

利息淨額乃利用折現率將定額福利負債或資產淨額計算。本集團於綜合收益表「銷售成本」,「銷售及分銷支出」及「行政支出」下確認定額福利責任之以下變動。

- 服務成本包括現時服務成本、過往服務成本、裁減之損益及非例行結算
- 利息支出或收入淨額

3. SUMMARY OF SIGNIFICANT ACCOUNTING POLICIES *(continued)*

Employee benefits *(continued)*

(a) Pension schemes (continued)

Remeasurements arising from the Old Scheme, comprising actuarial gains and losses, the effect of the asset ceiling (excluding amounts included in net interest on the net defined benefit liability) and the return on plan assets (excluding amounts included in net interest on the net defined benefit liability), are recognized immediately in the consolidated statement of financial position with a corresponding debit or credit to retained profits through other comprehensive income in the period in which they occur. Remeasurements are not reclassified to the income statement in subsequent periods.

Past service costs are recognized in the income statement at the earlier of:

- the date of the plan amendment or curtailment; and
- the date that the Group recognizes restructuring-related costs

Net interest is calculated by applying the discount rate to the net defined benefit liability or asset. The Group recognizes the following changes in the net defined benefit obligation under "cost of sales", "selling and distribution expenses" and "administrative expenses" in the consolidated income statement.

- Service costs comprising current service costs, past-service costs, gains and losses on curtailments and non-routine settlements
- Net interest expense or income

3. 主要會計政策摘要(續)

僱員福利(續)

(a) 退休金計劃(續)

於二零零五年，台灣政府修訂了相關的退休金計劃，於勞工退休金條例中，增加了新的供款性退休金計劃(「新計劃」)，並於二零零五年七月一日生效。根據修訂的退休規則，僱員能按需要選擇新計劃或繼續舊計劃。本集團在台灣之附屬公司對選擇了新計劃的僱員的責任為自選擇後按每月報酬的所需部分供款予政府指定賬戶，但本集團在台灣之附屬公司仍須負責按舊計劃於二零零五年七月一日前相關服務年期的部分。

(b) 基於股權的支付交易

本公司採納購股權計劃，目的是獎勵及鼓勵為本集團帶來貢獻之合資格之參與人士。集團的僱員(包括董事)為集團提供服務藉以換取股權形式報酬之交易是為「以股權支付交易」。

以股權支付交易的成本連同股價的相應升幅會於達到表現及／或服務條件的期內確認為僱員福利支出。由每個報告期末直至歸屬日就以股權支付交易確認的累計支出反映歸屬期屆滿，以及就本集團有關最終將會歸屬的股本工具數目的最佳估計。每一期間收益表之扣除或計入，指該期間開始和結束時已確認累計支出之變動。

3. SUMMARY OF SIGNIFICANT ACCOUNTING POLICIES *(continued)*

Employee benefits *(continued)*

(a) Pension schemes (continued)

In 2005, the Taiwan government amended the related pension scheme regulations by adding a new contributory pension scheme (the "New Scheme") in the Labour Pension Act, which became effective on 1 July 2005. According to the amended retirement regulations, the employees could choose to either select the New Scheme or to stay with the Old Scheme whatever they want. The obligation of the Group's subsidiaries in Taiwan to those employees selecting the New Scheme is to contribute the required portion of the monthly compensation to the government designated account since the election, while the Group's subsidiaries in Taiwan are still liable under the Old Scheme for the portion pertaining to the service years prior to 1 July 2005.

(b) Share-based payment transactions

The Company operates a share option scheme for the purpose of providing incentives and rewards to eligible participants who contribute to the success of the Group's operations. Employees (including directors) of the Group receive remuneration in the form of share-based payment transactions, whereby employees render services in exchange for equity instruments ("equity-settled transactions").

The cost of equity-settled transactions is recognized in employee benefit expense, together with a corresponding increase in equity, over the period in which the performance and/or service conditions are fulfilled. The cumulative expense recognized for equity-settled transactions at the end of each reporting period until the vesting date reflects the extent to which the vesting period has expired and the Group's best estimate of the number of equity instruments that will ultimately vest. The charge or credit to the income statement for a period represents the movement in the cumulative expense recognized as at the beginning and end of that period.

3. 主要會計政策摘要*(續)*

僱員福利*(續)*

(b) 基於股權的支付交易(續)

釐定獎勵獲授當日之公平值時，並不計及服務及非市場表現條件，惟在有可能符合條件的情況下，作為本集團對最終將會歸屬的股本工具數目最佳估計之一部分評估。市場表現條件反映於獲授當日之公平值。獎勵之任何其他附帶條件(但不帶有附屬服務要求)視作非歸屬條件。非歸屬條件反映於獎勵之公平值中，除非同時具服務及／或表現條件，否則獎勵即時支銷。

因非市場表現及／或服務條件尚未達到，該獎勵最終未歸屬而不確認任何支出。當獎勵包括市場或非歸屬條件，倘符合所有其他表現及／或服務條件，不論市場或非歸屬條件是否達到要求，該等交易均視作已歸屬。

當以股權支付報酬的條件修訂時，會確認最少的支出，猶如條款並無修訂一般之符合獎勵原先條款之水平。此外，倘按修訂日期的計算，任何修訂導致基於股權的支付交易的總公平值有所增加，或對僱員帶來其他利益，則應就該等修訂確認支出。

3. SUMMARY OF SIGNIFICANT ACCOUNTING POLICIES *(continued)*

Employee benefits *(continued)*

(b) Share-based payment transactions (continued)

Service and non-market performance conditions are not taken into account when determining the grant date fair value of awards, but the likelihood of the conditions being met is assessed as part of the Group's best estimate of the number of equity instruments that will ultimately vest. Market performance conditions are reflected within the grant date fair value. Any other conditions attached to an award, but without an associated service requirement, are considered to be non-vesting conditions. Non-vesting conditions are reflected in the fair value of an award and lead to an immediate expensing of an award unless there are also service and/or performance conditions.

For awards that do not ultimately vest because non-market performance and/or service conditions have not been met, no expense is recognized. Where awards include a market or non-vesting condition, the transactions are treated as vesting irrespective of whether the market or non-vesting condition is satisfied, provided that all other performance and/or service conditions are satisfied.

Where the terms of an equity-settled award are modified, as a minimum an expense is recognized as if the terms had not been modified, if the original terms of the award are met. In addition, an expense is recognized for any modification that increases the total fair value of the share-based payment transaction, or is otherwise beneficial to the employee as measured at the date of modification.

3. 主要會計政策摘要*(續)*

僱員福利*(續)*

(b) 基於股權的支付交易(續)

當以股權支付報酬註銷時，會視作報酬已於註銷當日已歸屬，而報酬尚未確認的任何支出會即時確認。此包括未符合屬本集團或僱員控制範圍內之非歸屬條款所涉及之購股權。然而，倘註銷的報酬有任何替代的新報酬，並指定為授出當日的替代報酬，則該項註銷及報酬會如上段所述被視為原有報酬的修訂處理。

未行使購股權的攤薄影響會以額外股份攤薄入賬，計算每股盈利。

3. SUMMARY OF SIGNIFICANT ACCOUNTING POLICIES *(continued)*

Employee benefits *(continued)*

(b) Share-based payment transactions (continued)

Where an equity-settled award is cancelled, it is treated as if it had vested on the date of cancellation, and any expense not yet recognized for the award is recognized immediately. This includes any award where non-vesting conditions within the control of either the Group or the employee are not met. However, if a new award is substituted for the cancelled award, and is designated as a replacement award on the date that it is granted, the cancelled and new awards are treated as if they were a modification of the original award, as described in the previous paragraph.

The dilutive effect of outstanding options is reflected as additional share dilution in the computation of earnings per share.

4. 重大會計判斷及估計

編製本集團財務報表時，管理層須作出可能影響收益、支出、資產及負債呈報金額及相應披露以及或然負債披露之判斷、估計及假設。此等假設及估計之不確定因素可能導致須於未來為受影響之資產及負債賬面值作出重大調整。

4. SIGNIFICANT ACCOUNTING JUDGEMENTS AND ESTIMATES

The preparation of the Group's financial statements requires management to make judgements, estimates and assumptions that affect the reported amounts of revenue, expenses, assets and liabilities, and their accompanying disclosures, and the disclosure of contingent liabilities. Uncertainty about these assumptions and estimates could result in outcomes that could require a material adjustment to the carrying amounts of the assets or liabilities affected in the future.

4. 重大會計判斷及估計*(續)*

判斷

於應用本集團之會計政策過程中，管理層已作出下列對財務報表內所確認金額產生最重大影響之判斷(不包括涉及估計者):

(a) 資產減值

釐定資產有否出現減值或過往導致減值之情況是否不再存在時，本集團須就資產減值範圍作出判斷，特別是評估(1)有否出現可能影響資產價值之事件或影響資產價值之該等事件已不存在；(2)資產賬面值是否獲得日後現金流量現值淨額支持，而日後現金流量按持續使用資產或終止確認估計；及(3)編製現金流量預測所用適合主要假設包括現金流量預測是否以適當比率折現。倘管理層所選用以決定減值水平之假設(包括現金流量預測所用折現率或增長率假設)有變，或對減值測試所用現值淨額構成重大影響。

(b) 分派股息產生之扣繳稅

本集團在決定是否應根據有關稅務管轄權就若干附屬公司所分派之股息計提扣繳稅，乃按支付股息時間而作出判斷。本集團認為，倘若於可預見之未來溢利不獲分派，則毋須計提扣繳稅。

4. SIGNIFICANT ACCOUNTING JUDGEMENTS AND ESTIMATES *(continued)*

Judgements

In the process of applying the Group's accounting policies, management has made the following judgements, apart from those involving estimations, which have the most significant effect on the amounts recognized in the financial statements:

(a) Impairment of assets

In determining whether an asset is impaired or the event previously causing the impairment no longer exists, the Group has to exercise judgement in the area of asset impairment, particularly in assessing: (1) whether an event has occurred that may affect the asset value or such event affecting the asset value has not been in existence; (2) whether the carrying value of an asset can be supported by the net present value of future cash flows which are estimated based upon the continued use of the asset or derecognition; and (3) the appropriate key assumptions to be applied in preparing cash flow projections including whether these cash flow projections are discounted using an appropriate rate. Changing the assumptions selected by management to determine the level of impairment, including the discount rates or the growth rate assumptions in the cash flow projections, could materially affect the net present value used in the impairment test.

(b) Withholding taxes arising from the distributions of dividends

The Group's determination as to whether to accrue for withholding taxes arising from the distributions of dividends from certain subsidiaries according to the relevant tax jurisdictions is subject to judgement on the timing of the payment of the dividend. The Group considered that if the profits will not be distributed in the foreseeable future, then no withholding taxes should be provided.

4. 重大會計判斷及估計*(續)*

判斷*(續)*

(c) 投資物業和自用物業的劃分

本集團釐定一項物業是否符合投資物業資格，並已制定作出此類判斷的準則。投資物業指為賺取租金或資本升值或兩者兼得而持有的物業。因此，本集團考慮一項物業產生的現金流量是否很大程度上獨立於本集團持有的其他資產。一些物業部分是為賺取租金或資本升值而持有，而另一部分為用於生產或提供貨品或服務或行政用途而持有。倘該等部分可分開出售或根據融資租賃分開出租，則本集團對該等部分獨立列賬。倘該等部分不能分開出售，則只有在為用於生產或提供貨品或服務或行政用途而持有的部分不重大的情況下，該物業方屬投資物業。判斷是對各單項物業作出，以確定配套服務是否如此重要以致物業不符合投資物業的資格。

4. SIGNIFICANT ACCOUNTING JUDGEMENTS AND ESTIMATES *(continued)*

Judgements *(continued)*

(c) Classification between investment properties and owner-occupied properties

The Group determines whether a property qualifies as an investment property, and has developed criteria in making that judgement. Investment property is a property held to earn rentals or for capital appreciation or both. Therefore, the Group considers whether a property generates cash flows largely independently of the other assets held by the Group. Some properties comprise a portion that is held to earn rentals or for capital appreciation and another portion that is held for use in the production or supply of goods or services or for administrative purposes. If these portions could be sold separately or leased out separately under a finance lease, the Group accounts for the portions separately. If the portions could not be sold separately, the property is an investment property only if an insignificant portion is held for use in the production or supply of goods or services or for administrative purposes. Judgement is made on an individual property basis to determine whether ancillary services are so significant that a property does not qualify as an investment property.

4. 重大會計判斷及估計*(續)*

判斷*(續)*

(d) 融資租賃與經營租賃的劃分

租賃須分類為融資租賃(此租賃轉移擁有權之所有回報及風險大部分，及導致出租人確認應收款)或經營租賃(此租賃導致出租人仍確認租賃資產)。

以下情況一般會將租賃分類為融資租賃：

- 在租賃期屆滿時，租賃將資產的擁有權轉移給承租人；
- 承租人有購買資產的選擇權，所訂立的購買價格預計將遠低於行使選擇權時的公平值，並於租賃開始日時，就可合理地確定該選擇權將被行使；
- 即使所有權不轉移，但租賃期佔資產使用壽命的大部分；
- 於租賃開始日，最少應付租賃款項的現值幾乎相當於租賃資產的公平值；或
- 租賃資產性質特殊，如果不作較大改造，只有承租人才能使用。

4. SIGNIFICANT ACCOUNTING JUDGEMENTS AND ESTIMATES *(continued)*

Judgements *(continued)*

(d) Classification between finance leases and operating leases

Leases are required to be classified as either finance leases (which transfer substantially all the risks and rewards of ownership, and give rise to the recognition of a receivable by the lessor) or operating leases (which result in the recognition of the leased asset by the lessor).

Situations that would normally lead to a lease being classified as a finance lease include the following:

- the lease transfers ownership of the asset to the lessee by the end of the lease term;
- the lessee has the option to purchase the asset at a price which is expected to be sufficiently lower than the fair value at the date the option becomes exercisable and, at the inception of the lease, it is reasonably certain that the option will be exercised;
- the lease term is for the major part of the economic life of the asset, even if title is not transferred;
- at the inception of the lease, the present value of the minimum lease payments amounts to at least substantially all of the fair value of the leased asset; or
- the leased assets are of a specialized nature such that only the lessee can use them without major modifications being made.

4. 重大會計判斷及估計*(續)*

判斷*(續)*

(e) 釐定附有續租選擇權的合同租期的重大判斷

本集團有一張含延期選擇權的租賃合同。本集團運用判斷以評估是否行使選擇權作續租。就此，本集團會考慮產生經濟誘因以使其行使續租的所有相關因素。於開始日期後，倘出現本集團可予控制的重大事項或情況改變，並影響其行使或不行使續租選擇權的能力，則本集團會重新評估租期。

由於該資產對本集團營運構成重要性，本集團將續租期計入物業租賃租期的一部分。該租賃有一個不可撤銷的短期間(即五年)，而倘替代品是不易可得的，則將會對營運造成重大負面影響。

4. SIGNIFICANT ACCOUNTING JUDGEMENTS AND ESTIMATES *(continued)*

Judgements *(continued)*

(e) Significant judgement in determining the lease term of a contract with a renewal option

The Group has a lease contract that includes an extension option. The Group applies judgement in evaluating whether or not to exercise the option to renew the lease. That is, it considers all relevant factors that create an economic incentive for it to exercise the renewal. After the commencement date, the Group reassesses the lease term if there is a significant event or change in circumstances that is within its control and affects its ability to exercise or not to exercise the option to renew.

The Group includes the renewal period as part of the lease term for a lease of its property due to the significance of the asset to its operations. The lease has a short non-cancellable period (i.e., five years) and there will be a significant negative effect on operation if a replacement is not readily available.

4. 重大會計判斷及估計*(續)*

估計不明朗因素

大有可能導致下一財政年度之資產及負債賬面值須作重大調整之未來主要假設及報告期末之其他主要估計不明朗因素討論如下。

(a) 應收貿易賬款及應收融資租賃賬款預期信貸虧損撥備之估計

本集團利用撥備矩陣計算應收貿易賬款及應收融資租賃賬款之預期信貸虧損。撥備率乃基於多個具有類似虧損模式之客戶分部組別之逾期天數釐定。本集團考慮於報告日期可得的有關過往事項、當前狀況及未來經濟狀況預測之資料。

撥備矩陣初始以本集團觀察所得之歷史違約率為基礎。本集團將校準矩陣，以利用前瞻性資料調整歷史信貸虧損經驗。舉例而言，倘預測經濟狀況預期於來年轉差，導致製造界別違約宗數上升，則會調整歷史違約率。於各報告日期，本集團會更新其觀察所得之歷史違約率，並分析前瞻性估計之變動。

4. SIGNIFICANT ACCOUNTING JUDGEMENTS AND ESTIMATES *(continued)*

Estimation uncertainty

The key assumptions concerning the future and other key sources of estimation uncertainty at the end of the reporting period, that have a significant risk of causing a material adjustment to the carrying amounts of assets and liabilities within the next financial year, are described as below.

(a) Estimation regarding provision for expected credit losses on trade receivables and finance lease receivables

The Group uses a provision matrix to calculate ECLs for trade receivables and finance lease receivables. The provision rates are based on days past due for groupings of various customer segments that have similar loss patterns. The Group takes into consideration information that is available at the reporting date about past events, current conditions and forecasts of future economic conditions.

The provision matrix is initially based on the Group's historical observed default rates. The Group will calibrate the matrix to adjust the historical credit loss experience with forward-looking information. For instance, if forecast economic conditions are expected to deteriorate over the next year which can lead to an increased number of defaults in the manufacturing sector, the historical default rates are adjusted. At each reporting date, the historical observed default rates are updated and changes in the forward-looking estimates are analyzed.

4. 重大會計判斷及估計*(續)*

估計不明朗因素*(續)*

(a) 應收貿易賬款及應收融資租賃賬款預期信貸虧損撥備之估計(續)

對觀察所得之歷史違約率、預測經濟狀況及預期信貸虧損三者之相互關係之評估屬重大估計。預期信貸虧損之金額易受狀況變動及預測經濟狀況影響。本集團之歷史信貸虧損經驗及對經濟狀況之預測亦未必能反映客戶日後之實際違約情況。有關本集團應收貿易賬款及應收融資租賃賬款的預期信貸虧損的資料分別披露於財務報表附註21及23。

(b) 存貨撥備之估計

本集團之管理層定期檢閱陳舊存貨之貨齡分析，此涉及將陳舊存貨項目之賬面值與可變現淨值作比較。另外，本集團之管理層考慮因素包括過往銷售記錄、期末後存貨使用或銷售情況及售價、市場需求、技術變更以及本集團未來存貨的使用或銷售計劃。其目的在於確定有否需要對任何陳舊及滯銷之項目於財務報表計提撥備。此外，亦定期進行人手點算所有存貨，以決定是否需要對任何已辨別之陳舊存貨及次貨計提撥備。於二零二三年三月三十一日的存貨賬面淨值為港幣791,763,000元(二零二二年：港幣1,061,900,000元)，詳情載列於財務報表附註20。

4. SIGNIFICANT ACCOUNTING JUDGEMENTS AND ESTIMATES *(continued)*

Estimation uncertainty *(continued)*

(a) Estimation regarding provision for expected credit losses on trade receivables and finance lease receivables (continued)

The assessment of the correlation among historical observed default rates, forecast economic conditions and ECLs is a significant estimate. The amount of ECLs is sensitive to changes in circumstances and forecast economic conditions. The Group's historical credit loss experience and forecast of economic conditions may also not be representative of a customer's actual default in the future. The information about the ECLs on the Group's trade receivables and finance lease receivables is disclosed in notes 21 and 23 to the financial statements, respectively.

(b) Estimation regarding inventory provision

Management of the Group reviews the inventory ageing analysis on a periodic basis for those aged inventories. This involves comparison of the carrying value of the aged inventory items with the respective net realizable value. In addition, management of the Group considers various factors, including historical sales patterns, post year-end usage or sales and selling prices of inventories, market demand, technological changes and the Group's future plan of usage or sale to ascertain whether provision is required to be made in the financial statements for any obsolete and slow-moving items. Physical counts on all inventories are carried out on a periodic basis in order to determine whether any provision is required to be made in respect of any obsolete and defective inventories identified. The net carrying amount of inventories as at 31 March 2023 was HK$791,763,000 (2022: HK$1,061,900,000), details of which are set out in note 20 to the financial statements.

4. 重大會計判斷及估計(續)

估計不明朗因素(續)

(c) 商譽減值

本集團至少每年釐定商譽是否減值，對已獲分配商譽之現金產出單位之使用價值作出估計。估計使用價值要求本集團對來自現金產出單位之預期未來現金流量作出估計，亦要選擇合適折現率及增長率計算該等現金流量之現值。於二零二三年三月三十一日，商譽之賬面淨值為港幣51,905,000元(二零二二年：港幣51,905,000元)。減值評估之詳情載列於附註17。

4. SIGNIFICANT ACCOUNTING JUDGEMENTS AND ESTIMATES *(continued)*

Estimation uncertainty *(continued)*

(c) Impairment of goodwill

The Group determines whether goodwill is impaired at least on an annual basis. This requires an estimation of the value in use of the cash-generating units to which the goodwill is allocated. Estimating the value in use requires the Group to make an estimate of the expected future cash flows from the cash-generating unit and also to choose a suitable discount rate and growth rate in order to calculate the present value of those cash flows. The net carrying amount of goodwill as at 31 March 2023 was HK$51,905,000 (2022: HK$51,905,000). More details of the impairment assessment are given in note 17.

5. 經營分部資料

本集團主要從事製造及銷售注塑機及有關產品。就管理而言，本集團根據其客戶所在地分為不同業務單位，有下列三個可報告經營分部：

(i) 中國大陸及香港；
(ii) 台灣；及
(iii) 其他海外國家。

管理層會分開監察本集團之經營分部之業績，以就資源分配及表現評估方面作出決定。分部表現乃根據經調整之除稅前溢利而計量之可報告分部溢利來作評估。經調整除稅前溢利與本集團之除稅前溢利計量一致，惟利息收入、未攤分收入及收益、非租賃有關的融資成本、應佔聯營公司溢利減虧損及企業及未攤分支出不計入有關計量中。

5. OPERATING SEGMENT INFORMATION

The Group is principally involved in the manufacture and sale of plastic injection moulding machines and related products. For management purposes, the Group is organized into business units based on the locations of customers and has three reportable operating segments as follows:

(i) Mainland China and Hong Kong;
(ii) Taiwan; and
(iii) Other overseas countries.

Management monitors the results of the Group's operating segments separately for the purpose of making decisions about resource allocation and performance assessment. Segment performance is evaluated based on reportable segment profit, which is a measure of adjusted profit before tax. The adjusted profit before tax is measured consistently with the Group's profit before tax except that interest income, unallocated income and gains, non-lease-related finance costs, share of profits less losses of associates and corporate and unallocated expenses are excluded from such measurement.

5. 經營分部資料*(續)*

分部資產扣除於聯營公司之投資、遞延稅項資產及現金及銀行結存(抵押銀行存款除外)。分部負債扣除計息銀行貸款、應付稅項及遞延稅項負債。

可報告經營分部之間並沒有重大銷售。

下表載列截至二零二三年及二零二二年三月三十一日止年度本集團經營分部之收益、業績、若干資產、負債及開支資料。

5. OPERATING SEGMENT INFORMATION *(continued)*

Segment assets exclude investments in associates, deferred tax assets and cash and bank balances except pledged bank deposits. Segment liabilities exclude interest-bearing bank borrowings, tax payable and deferred tax liabilities.

There are no significant sales between the reportable operating segments.

The following tables present revenue, results, certain assets, liabilities and expenditure information for the Group's operating segments for the years ended 31 March 2023 and 2022.

		從對外客戶的分部收益 Segment revenue from external customers		**分部業績 Segment results**	
(港幣千元)	*(HK$'000)*	**2023**	2022	**2023**	2022
中國大陸及香港	Mainland China and Hong Kong	**1,670,556**	1,986,848	**168,911**	226,354
台灣	Taiwan	**63,358**	132,282	**793**	1,988
其他海外國家	Other overseas countries	**578,670**	609,633	**28,906**	43,553
		2,312,584	2,728,763	**198,610**	271,895

經營分部業績與除稅前溢利調節如下:	**Reconciliation of results of operating segments to profit before tax is as follows:**		
經營分部業績	Operating segment results	**198,610**	271,895
未攤分收入及收益	Unallocated income and gains	**12,545**	16,345
企業及未攤分支出	Corporate and unallocated expenses	**(50,620)**	(49,355)
融資成本(租賃負債利息除外)	Finance costs (other than interest on lease liabilities)	**(680)**	(1,094)
應佔聯營公司溢利減虧損	Share of profits less losses of associates	**(914)**	777
除稅前溢利	Profit before tax	**158,941**	238,568

5. 經營分部資料*(續)*

5. OPERATING SEGMENT INFORMATION *(continued)*

		分部資產 Segment assets		分部負債 Segment liabilities	
(港幣千元)	*(HK$'000)*	**2023**	2022	**2023**	2022
中國大陸及香港	Mainland China and Hong Kong	**2,904,870**	3,157,947	**872,395**	938,158
台灣	Taiwan	**97,810**	116,254	**13,590**	30,052
其他海外國家	Other overseas countries	**439,290**	411,138	**78,577**	94,089
		3,441,970	3,685,339	**964,562**	1,062,299
於聯營公司之投資	Investments in associates	**25,663**	28,529	**–**	–
未攤分資產	Unallocated assets	**681,676**	715,459	**–**	–
未攤分負債	Unallocated liabilities	**–**	–	**116,566**	138,566
		4,149,309	4,429,327	**1,081,128**	1,200,865

		其他分部資料 Other segment information					
		折舊及攤銷 Depreciation and amortization		其他非現金支出／(收入) Other non-cash expenses/(income)		資本開支 Capital expenditure	
(港幣千元)	*(HK$'000)*	**2023**	2022	**2023**	2022	**2023**	2022
中國大陸及香港	Mainland China and Hong Kong	**57,558**	53,425	**1,820**	(12,698)	**50,188**	147,681
台灣	Taiwan	**1,051**	1,436	**20**	34	**919**	1,692
其他海外國家	Other overseas countries	**1,805**	2,038	**29**	7	**994**	1,097
		60,414	56,899	**1,869**	(12,657)	**52,101**	150,470

5. 經營分部資料(續)

5. OPERATING SEGMENT INFORMATION (continued)

		非流動資產 Non-current assets	
(港幣千元)	(HK$'000)	**2023**	2022
中國大陸及香港	Mainland China and Hong Kong	**1,041,693**	1,117,511
台灣	Taiwan	**15,613**	15,306
其他海外國家	Other overseas countries	**310**	534
		1,057,616	1,133,351

上述之非流動資產資料乃按資產所在地及扣除遞延稅項資產及金融工具計算。

The non-current asset information above is based on the locations of the assets and excludes deferred tax assets and financial instruments.

主要客戶之資料

Information about major customers

截至二零二三年三月三十一日止年度，有與單一對外客戶之交易收益佔本集團總收益之10%或以上及來自位於中國大陸及香港可報告經營分部之該客戶的收益為港幣351,464,000元。

For the year ended 31 March 2023, revenue from transactions with a single external customer amounted to 10% or more of the Group's total revenue and the revenue derived from that customer by the reportable operating segment in Mainland China and Hong Kong amounted to HK$351,464,000.

截至二零二二年三月三十一日止年度，與單一對外客戶之交易收益並無佔本集團總收益之10%或以上。

For the year ended 31 March 2022, no revenue from transactions with a single external customer amounted to 10% or more of the Group's total revenue.

6. 收益

6. REVENUE

本集團來自客戶合約的收益與銷售注塑機及有關產品有關，並且所有收益均於貨品控制權轉移至客戶時確認，一般為交付貨品時。

The Group's revenue from contracts with customers is related to the sale of plastic injection moulding machines and related products, and all the revenue is recognized at a point in time when control of goods is transferred to customers generally on delivery of the goods.

(港幣千元)	(HK$'000)	**2023**	2022
來自客戶合約的收益	Revenue from contracts with customers	**2,312,584**	2,728,763

6. 收益(續)

6. REVENUE (continued)

分拆收益資料

Disaggregated revenue information

(港幣千元)	(HK$'000)	**2023**	2022
來自客戶合約的收益－銷售注塑機及有關產品	**Revenue from contracts with customers – sale of plastic injection moulding machines and related products**		
按地域區分之市場	*Geographical markets*		
中國大陸及香港	Mainland China and Hong Kong	**1,670,556**	1,986,848
台灣	Taiwan	**63,358**	132,282
其他海外國家	Other overseas countries	**578,670**	609,633
來自客戶合約的收益總計	Total revenue from contracts with customers	**2,312,584**	2,728,763

下表載列計入報告期初合約負債而於本報告期內確認的收益金額：

The following table shows the amounts of revenue recognized in the current reporting period that were included in the contract liabilities at the beginning of the reporting period:

(港幣千元)	(HK$'000)	**2023**	2022
計入報告期初合約負債的已確認收益：銷售注塑機及有關產品	Revenue recognized that was included in contract liabilities at the beginning of the reporting period: Sale of plastic injection moulding machines and related products	**107,191**	132,591

履約責任

Performance obligations

有關本集團履約責任的資料概列如下：

Information about the Group's performance obligations is summarized below:

銷售注塑機及有關產品

Sale of plastic injection moulding machines and related products

履約責任於交付貨品後達成，而付款一般於交付起計三十至一百八十天內到期。

The performance obligation is satisfied upon delivery of the goods and payment is generally due between 30 and 180 days from delivery.

7. 除税前溢利

7. PROFIT BEFORE TAX

本集團之除税前溢利已扣除／(計入)下列各項：

The Group's profit before tax is arrived at after charging/(crediting):

(港幣千元)	(HK$'000)	附註 Notes	2023	2022
售出存貨成本	Cost of inventories sold		**1,764,532**	2,081,488
物業、廠房及設備之折舊	Depreciation of property, plant and equipment	*14*	**57,024**	53,967
使用權資產之折舊	Depreciation of right-of-use assets	*16(a)*	**2,971**	2,729
無形資產之攤銷	Amortization of intangible assets	*18*	**419**	203
出售物業、廠房及設備及使用權資產之收益淨額*	Gain on disposal of items of property, plant and equipment and right-of-use asset, net*		**(30,953)**	(1,225)
物業、廠房及設備之註銷*	Write-off of items of property, plant and equipment*	*14*	**1,869**	1,153
不記入租賃負債計量的租賃款	Lease payments not included in the measurement of lease liabilities	*16(c)*	**4,532**	4,495
研究及開發費用***	Research and development costs***		**79,396**	61,613
政府補助款*/****	Government grants*/****		**(39,553)**	(14,373)
核數師酬金	Auditor's remuneration		**2,709**	2,705
員工福利支出(董事薪酬除外－*附註9*)：	Employee benefit expenses (excluding directors' emoluments – *note 9*):			
工資及薪酬	Wages and salaries		**313,667**	334,365
以股權支付的購股權支出	Equity-settled share option expenses		**723**	779
退休金計劃供款(定額供款計劃)*****	Pension scheme contributions (defined contribution scheme)*****		**38,671**	35,372
退休金計劃成本(定額福利計劃)	Pension scheme costs (defined benefit scheme)	*29*	**57**	121
應收貿易賬款減值／(減值撥回)淨額***	Impairment/(write-back of impairment) of trade receivables, net***	*21*	**(1,293)**	3,551
存貨撥備／(撥備撥回)淨額**	Provision/(write-back of provision) for inventories, net**		**(11,520)**	1,414
應收融資租賃賬款減值撥回淨額***	Write-back of impairment of finance lease receivables, net***	*23*	**(846)**	(2,023)
其他應收賬款減值撥回淨額***	Write-back of impairment of other receivables, net***	*22*	**–**	(86)
匯兑差額淨額*	Foreign exchange differences, net*		**13,113**	(22,064)
投資物業之公平值收益*	Fair value gains on investment properties*	*15*	**–**	(13,810)
自用物業之租金收入總值*	Gross rental income on owner-occupied properties*		**(5,889)**	(2,967)
減：因自用物業賺取租金產生之直接經營開支	Less: Direct operating expenses arising from rental-earning owner-occupied properties		**35**	18
自用物業之租金收入淨額	Net rental income on owner-occupied properties		**(5,854)**	(2,949)

7. 除稅前溢利*(續)*

本集團之除稅前溢利已扣除／(計入)下列各項：*(續)*

7. PROFIT BEFORE TAX *(continued)*

The Group's profit before tax is arrived at after charging/(crediting): *(continued)*

(港幣千元)	*(HK$'000)*	*附註 Notes*	**2023**	2022
投資物業之租金收入總值*	Gross rental income on investment properties*		**(29,176)**	(27,832)
減：因投資物業賺取租金產生之直接經營開支	Less: Direct operating expenses arising from rental-earning investment properties		**1,457**	1,510
投資物業之租金收入淨額	Net rental income on investment properties		**(27,719)**	(26,322)
利息收入*	Interest income*		**(12,335)**	(15,852)
融資租賃利息收入*	Finance lease interest income*		**(210)**	(493)

* 該等項目已包括於綜合收益表之「其他收入及收益淨額」內。

** 該項目已包括於綜合收益表之「銷售成本」內。

*** 該等項目已包括於綜合收益表之「其他經營支出淨額」內。

****因主要於中國大陸開展研究活動及從各個政府的新型冠狀病毒疫情紓困計劃下收取的補助而收到多項政府補助。收到的政府補助，倘若無附帶任何未實現之條件或有事項且與意圖補助之成本並不匹配，則被確認為其他收入。倘若與收到的政府補助所匹配的相關支出尚未發生或所附帶條件尚未實現，則在綜合財務狀況表中作為「其他應付賬款及應計負債」列示。

*****於二零二三年三月三十一日及二零二二年三月三十一日，本集團並無可用作扣減其來年退休金計劃供款的沒收供款。

* These items are included in "Other income and gains, net" on the face of the consolidated income statement.

** This item is included in "Cost of sales" on the face of the consolidated income statement.

*** These items are included in "Other operating expenses, net" on the face of the consolidated income statement.

****Various government grants have been received mainly for setting up research activities in Mainland China and as subsidy from various governments under COVID-19 pandemic relief schemes. Conditions or contingencies relating to these grants are fulfilled and they are not deducted from the related costs for which they are intended to compensate, but recorded in other income. Government grants received for which related expenditure has not yet been incurred or to which there were unfulfilled conditions are included in "Other payables and accruals" on the face of the consolidated statement of financial position.

*****As at 31 March 2023 and 31 March 2022, the Group had no forfeited contributions available to reduce its contributions to the pension schemes in future years.

8. 融資成本

8. FINANCE COSTS

(港幣千元)	(HK$'000)	2023	2022
銀行貸款利息	Interest on bank loans	**680**	1,094
租賃負債利息	Interest on lease liabilities	**477**	212
		1,157	1,306

9. 董事薪酬

9. DIRECTORS' EMOLUMENTS

根據上市規則及香港公司條例第383(1)(a)、(b)、(c)及(f)條以及公司(披露董事利益資料)規例第2分部，年內董事薪酬披露如下：

Directors' emoluments for the year, disclosed pursuant to the Listing Rules, section 383(1)(a), (b), (c) and (f) of the Hong Kong Companies Ordinance and Part 2 of the Companies (Disclosure of Information about Benefits of Directors) Regulation, are as follows:

(港幣千元)	(HK$'000)	2023	2022
袍金：	Fees:		
執行董事	Executive directors	**–**	–
獨立非執行董事	Independent non-executive directors	**1,056**	1,056
其他薪酬：	Other emoluments:		
薪金、津貼及實物利益	Salaries, allowances and benefits in kind	**8,442**	6,972
表現掛鉤花紅	Performance related bonuses	**5,343**	7,373
以股權支付的購股權支出	Equity-settled share option expenses	**718**	591
退休金計劃供款	Pension scheme contributions	**36**	36
		15,595	16,028

執行董事就彼等為本集團提供的服務及貢獻，根據本公司於二零一四年九月二十四日採納之購股權計劃獲授購股權，進一步詳請載列於財務報表附註32。該等購股權的公平值(已於歸屬期內在收益表中確認)按照於授予日期的價值釐定及計入本年度財務報表，並已於上述董事薪酬中披露。

Executive directors were granted share options under the share option scheme of the Company adopted on 24 September 2014 in respect of their services and contribution to the Group, further details of which are set out in note 32 to the financial statements. The fair value of such share options, which has been recognized in the income statement over the vesting periods, was determined as at the date of grant and the amount included in the financial statements for the current year is included in the above directors' emoluments disclosures.

9. 董事薪酬(續)

(a) 獨立非執行董事

年內，支付予獨立非執行董事的袍金如下：

9. DIRECTORS' EMOLUMENTS (continued)

(a) Independent non-executive directors

The fees paid to independent non-executive directors during the year were as follows:

(港幣千元)	(HK$'000)	**2023**	2022
陳智思先生	Mr. Bernard Charnwut CHAN	**258**	258
Anish LALVANI先生	Mr. Anish LALVANI	**276**	276
利子厚先生	Mr. Michael Tze Hau LEE	**264**	264
陳慶光先生	Mr. Johnson Chin Kwang TAN	**258**	258
		1,056	1,056

年內，並無其他薪酬支付予獨立非執行董事(二零二二年：無)。

There were no other emoluments payable to the independent non-executive directors during the year (2022: Nil).

上表所示獨立非執行董事之薪酬乃與彼等擔任本公司董事之服務有關。

The independent non-executive directors' emoluments shown above were for their services as directors of the Company.

9. 董事薪酬(續)

9. DIRECTORS' EMOLUMENTS *(continued)*

(b) 執行董事

(b) Executive directors

		2023					
(港幣千元)	*(HK$'000)*	袍金 Fees	薪金、津貼及實物利益 Salaries, allowances and benefits in kind	表現掛鈎花紅 Performance related bonuses	以股權支付的購股權支出 Equity-settled share option expenses	退休金計劃供款 Pension scheme contributions	薪酬總計 Total emoluments
蔣麗苑女士*	Ms. Lai Yuen CHIANG*	–	6,223	5,343	499	18	12,083
鍾效良先生	Mr. Stephen Hau Leung CHUNG	–	2,219	–	219	18	2,456
		–	8,442	5,343	718	36	14,539

		2022					
(港幣千元)	*(HK$'000)*	袍金 Fees	薪金、津貼及實物利益 Salaries, allowances and benefits in kind	表現掛鈎花紅 Performance related bonuses	以股權支付的購股權支出 Equity-settled share option expenses	退休金計劃供款 Pension scheme contributions	薪酬總計 Total emoluments
蔣麗苑女士	Ms. Lai Yuen CHIANG	–	4,644	6,506	389	18	11,557
鍾效良先生	Mr. Stephen Hau Leung CHUNG	–	2,328	867	202	18	3,415
		–	6,972	7,373	591	36	14,972

* 蔣麗苑女士的基本月薪酬調整至港幣500,000元，自二零二二年四月一日起生效。蔣女士的表現掛鈎花紅乃參照公司表現以及根據個人表現與貢獻而釐定。

* The basic monthly salary of Ms. Lai Yuen CHIANG was revised to HK$500,000 with effect from 1 April 2022. The performance related bonus of Ms. CHIANG was determined by reference to the Company's performance as well as individual performance and contribution.

9. 董事薪酬(續)

(b) 執行董事(續)

執行董事薪酬範圍如下：

9. DIRECTORS' EMOLUMENTS (continued)

(b) Executive directors (continued)

The emoluments of the executive directors fell within the following bands:

	董事人數 Number of directors	
(港幣) (HK$)	**2023**	2022
2,000,001 – 2,500,000	**1**	–
3,000,001 – 3,500,000	**–**	1
11,500,001 – 12,000,000	**–**	1
12,000,001 – 12,500,000	**1**	–
	2	2

上表所示執行董事之薪酬乃與彼等就管理本公司及本集團事務之服務有關。

截至二零二三年及二零二二年三月三十一日止年度內並無安排致使董事放棄或同意放棄任何薪酬。

年內，本集團並無支付薪酬予董事以促使對方加入本集團或作為加入本集團時之報酬、或離職補償(二零二二年：無)。

The executive directors' emoluments shown above were for their services in connection with the management of the affairs of the Company and the Group.

There was no arrangement under which a director waived or agreed to waive any remuneration during the years ended 31 March 2023 and 2022.

During the year, no emoluments were paid by the Group to the directors as an inducement to join, or upon joining the Group, or as compensation for loss of office (2022: Nil).

10. 五名獲最高薪酬之僱員

年內，五名獲最高薪酬之僱員包括二名(二零二二年：二名)董事，其薪酬已載列於財務報表附註9。

三名(二零二二年：三名)非董事最高薪酬僱員的年內薪酬詳情如下：

10. FIVE HIGHEST PAID EMPLOYEES

The five highest paid employees during the year included two (2022: two) directors, details of whose emoluments are set out in note 9 to the financial statements.

Details of the remuneration for the year of the three (2022: three) non-director highest paid employees are as follows:

(港幣千元)	*(HK$'000)*	**2023**	2022
薪金、津貼及實物利益	Salaries, allowances and benefits in kind	**2,883**	3,175
表現掛鉤花紅	Performance related bonuses	**1,019**	901
以股權支付的購股權支出	Equity-settled share option expenses	**162**	192
退休金計劃供款	Pension scheme contributions	**84**	54
		4,148	4,322

非董事最高薪酬僱員薪酬範圍如下：

The remuneration of the non-director highest paid employees fell within the following bands:

	僱員人數 Number of employees	
(港幣) (HK$)	**2023**	2022
1,000,001 – 1,500,000	**3**	2
1,500,001 – 2,000,000	**–**	1
	3	3

10. 五名獲最高薪酬之僱員*(續)*

非董事最高薪酬僱員就彼為本集團提供的服務及貢獻，根據本公司於二零一四年九月二十四日採納之購股權計劃獲授購股權，進一步詳情載列於財務報表附註32。該等購股權的公平值(已於歸屬期內在收益表中確認)按照於授予日期的價值釐定及計入本年度財務報表，並已於上述非董事最高薪酬僱員薪酬中披露。

10. FIVE HIGHEST PAID EMPLOYEES *(continued)*

Share options were granted under the share option scheme of the Company adopted on 24 September 2014 to the non-director highest paid employee in respect of his services and contribution to the Group, further details of which are set out in note 32 to the financial statements. The fair value of such share options, which has been recognized in the income statement over the vesting periods, was determined as at the date of grant and the amount included in the financial statements for the current year is included in the above non-director highest paid employees' remuneration disclosures.

11. 所得稅支出

本集團年內有源於香港之估計應課稅溢利，故就香港利得稅按16.5%稅率作出撥備。截至二零二二年三月三十一日止年度內，本集團未有計提香港利得稅，乃由於本集團於該年度沒有產生源於香港之應課稅溢利。其他地區之溢利稅項則按本集團經營業務所在國家／司法權區之現行稅率計算。

11. INCOME TAX EXPENSE

Hong Kong profits tax has been provided at the rate of 16.5% on the estimated assessable profits arising in Hong Kong during the year. For the year ended 31 March 2022, Hong Kong profits tax had not been provided as the Group did not generate any assessable profits arising in Hong Kong during that year. Taxes on profits assessable elsewhere have been calculated at the rates of tax prevailing in the countries/jurisdictions in which the Group operates.

(港幣千元)	*(HK$'000)*	**2023**	2022
即期：	Current:		
本年度支出	Charge for the year		
香港	Hong Kong	**2,252**	–
其他地區	Elsewhere	**21,113**	36,731
過往年度多提撥備	Overprovision in prior years	**(1,408)**	(441)
遞延*(附註30)*	Deferred *(note 30)*	**8,199**	(11,716)
本年度稅項支出	Tax charge for the year	**30,156**	24,574

11. 所得稅支出*(續)*

就除稅前溢利以適用於本公司及其附屬公司所在國家／司法權區之法定稅率計算(稅率由15%至40%(二零二二年：15%至40%))之稅項支出，與按實際稅率計算之稅項支出之調節如下：

11. INCOME TAX EXPENSE *(continued)*

A reconciliation of the tax expense applicable to profit before tax at the statutory rates, ranging from 15% to 40% (2022: 15% to 40%), for the countries/jurisdictions in which the Company and its subsidiaries are domiciled to the tax expense at the effective tax rates is as follows:

(港幣千元)	*(HK$'000)*	**2023**	2022
除稅前溢利	Profit before tax	**158,941**	238,568
按法定稅率計算之稅項	Tax at the statutory tax rates	**41,124**	58,212
個別省份或地方機構之稅務寬減／較低稅率	Tax concessions/lower tax rates for specific provinces and local authorities	**(13,996)**	(21,912)
聯營公司應佔溢利及虧損	Profits and losses attributable to associates	**229**	(194)
不可扣稅之支出	Expenses not deductible for tax	**16,100**	11,885
毋須繳納稅項之收入	Income not subject to tax	**(11,128)**	(12,052)
未確認之本年度稅項虧損	Tax losses for the year not recognized	**4,784**	3,580
使用未確認之過往年度稅項虧損	Unrecognized tax losses from prior years utilized	**(7,661)**	(1,211)
過往年度即期稅項之調整	Adjustments in respect of current tax of prior years	**(1,408)**	(441)
本集團之附屬公司分配利潤產生扣繳稅之影響	Effect of withholding tax on distributable profits of the subsidiaries of the Group	**2,112**	(13,293)
按本集團實際稅率計算之稅項支出	Tax charge at the Group's effective tax rates	**30,156**	24,574

12. 股息

12. DIVIDENDS

(港幣千元)	*(HK$'000)*	**2023**	2022
年內已付股息：	Dividends paid during the year:		
截至二零二二年三月三十一日止財政年度之末期－每股普通股港幣0.116元（截至二零二一年三月三十一日止年度：港幣0.115元）	Final in respect of the financial year ended 31 March 2022 – HK$0.116 (year ended 31 March 2021: HK$0.115) per ordinary share	**73,142**	72,511
中期－每股普通股港幣0.045元（二零二二年：港幣0.052元）	Interim – HK$0.045 (2022: HK$0.052) per ordinary share	**28,374**	32,788
		101,516	105,299
建議末期股息：	Proposed final dividends:		
末期－每股普通股港幣0.073元（二零二二年：港幣0.116元）	Final – HK$0.073 (2022: HK$0.116) per ordinary share	**46,029**	73,142

本年度建議之末期股息須經本公司股東在即將舉行之股東周年大會批准後方可作實。該等財務報表並未反映應付末期股息。

The proposed final dividend for the year is subject to the approval of the Company's shareholders at the forthcoming annual general meeting. These financial statements do not reflect the final dividend payable.

13. 本公司權益持有人應佔每股盈利

每股基本盈利乃根據年內本公司權益持有人應佔本集團溢利港幣130,289,000元(二零二二年：港幣213,309,000元)及年內已發行普通股之加權平均數630,531,600股(二零二二年:630,531,600股)計算所得。

由於截至二零二三年三月三十一日止年度尚未行使的購股權之影響對每股基本盈利金額並無攤薄效果，故於該年內概無就所呈列的每股基本盈利金額就攤薄進行調整。

由於截至二零二二年三月三十一日止年度尚未行使的購股權之影響對每股基本盈利金額具反攤薄效果，故於該年內概無就所呈列的每股基本盈利金額就攤薄進行調整。

13. EARNINGS PER SHARE ATTRIBUTABLE TO EQUITY HOLDERS OF THE COMPANY

The calculation of the basic earnings per share is based on the Group's profit attributable to equity holders of the Company for the year of HK$130,289,000 (2022: HK$213,309,000) and on the weighted average number of ordinary shares of 630,531,600 (2022: 630,531,600) in issue during the year.

No adjustment has been made to the basic earnings per share amount presented for the year ended 31 March 2023 in respect of a dilution as the impact of the share options outstanding had no dilutive effect on the basic earnings per share amount presented.

No adjustment had been made to the basic earnings per share amount presented for the year ended 31 March 2022 in respect of a dilution as the impact of the share options outstanding had an anti-dilutive effect on the basic earnings per share amount presented.

14. 物業、廠房及設備

14. PROPERTY, PLANT AND EQUIPMENT

二零二三年三月三十一日

31 March 2023

(港幣千元)	(HK$'000)	土地及樓宇* Land and buildings*	在建工程 Construction in progress	廠房、機器、傢俬及其他設備 Plant, machinery, furniture and other equipment	總計 Total
於二零二二年四月一日	At 1 April 2022				
成本	Cost	777,888	35,516	1,144,247	1,957,651
累計折舊及減值	Accumulated depreciation and impairment	(430,571)	–	(879,110)	(1,309,681)
賬面淨值	Net carrying amount	347,317	35,516	265,137	647,970
於二零二二年四月一日，已扣除累計折舊及減值	At 1 April 2022, net of accumulated depreciation and impairment	347,317	35,516	265,137	647,970
添置	Additions	–	9,050	43,051	52,101
出售	Disposals	(6,635)	–	(1,398)	(8,033)
註銷	Write-offs	(318)	–	(1,551)	(1,869)
轉撥	Transfers	–	(29,942)	29,942	–
本年度折舊撥備	Depreciation provided during the year	(28,571)	–	(28,453)	(57,024)
匯兑調整	Exchange realignment	(21,056)	(2,718)	(23,989)	(47,763)
於二零二三年三月三十一日，已扣除累計折舊及減值	At 31 March 2023, net of accumulated depreciation and impairment	290,737	11,906	282,739	585,382
於二零二三年三月三十一日	At 31 March 2023				
成本	Cost	681,285	11,906	1,085,056	1,778,247
累計折舊及減值	Accumulated depreciation and impairment	(390,548)	–	(802,317)	(1,192,865)
賬面淨值	Net carrying amount	290,737	11,906	282,739	585,382

* 於二零二三年三月三十一日，土地及樓宇包括永久業權土地港幣4,953,000元(二零二二年：港幣5,258,000元)。

* As at 31 March 2023, included in land and buildings are freehold land of HK$4,953,000 (2022: HK$5,258,000).

14. 物業、廠房及設備*(續)*

14. PROPERTY, PLANT AND EQUIPMENT *(continued)*

二零二二年三月三十一日 31 March 2022

(港幣千元)	*(HK$'000)*	土地及樓宇* Land and buildings*	在建工程 Construction in progress	廠房、機器、傢俬及其他設備 Plant, machinery, furniture and other equipment	總計 Total
於二零二一年四月一日	At 1 April 2021				
成本	Cost	750,598	10,021	1,002,628	1,763,247
累計折舊及減值	Accumulated depreciation and impairment	(384,330)	–	(844,888)	(1,229,218)
賬面淨值	Net carrying amount	366,268	10,021	157,740	534,029
於二零二一年四月一日，已扣除累計折舊及減值	At 1 April 2021, net of accumulated depreciation and impairment	366,268	10,021	157,740	534,029
添置	Additions	217	46,875	103,378	150,470
出售	Disposals	–	–	(592)	(592)
註銷	Write-offs	–	–	(1,153)	(1,153)
轉撥	Transfers	353	(21,870)	21,517	–
本年度折舊撥備	Depreciation provided during the year	(30,023)	–	(23,944)	(53,967)
匯兑調整	Exchange realignment	10,502	490	8,191	19,183
於二零二二年三月三十一日，已扣除累計折舊及減值	At 31 March 2022, net of accumulated depreciation and impairment	347,317	35,516	265,137	647,970
於二零二二年三月三十一日	At 31 March 2022				
成本	Cost	777,888	35,516	1,144,247	1,957,651
累計折舊及減值	Accumulated depreciation and impairment	(430,571)	–	(879,110)	(1,309,681)
賬面淨值	Net carrying amount	347,317	35,516	265,137	647,970

15. 投資物業

15. INVESTMENT PROPERTIES

(港幣千元)	*(HK$'000)*	**2023**	2022
於年初的賬面值	Carrying amount at beginning of year	**359,296**	331,533
於收益表確認之公平值變動*(附註7)*	Fair value changes recognized in the income statement *(note 7)*	**–**	13,810
匯兑調整	Exchange realignment	**(26,430)**	13,953
於年末的賬面值	Carrying amount at end of year	**332,866**	359,296

本集團投資物業根據各項物業之性質、特徵及風險列為位於中國大陸的工業物業。本集團投資物業依據獨立及專業資格估值師公司戴德梁行有限公司所作估值，於二零二三年三月三十一日之重估價值為港幣332,866,000元(二零二二年：港幣359,296,000元)。本集團管理層每年會決定委任外部估值師負責本集團物業之外部估值。挑選之標準包括市場知識、名聲、獨立性以及是否可保持專業標準。本集團管理層每年一次於年度財務報告進行估值時就估值假設及估值結果與估值師進行討論。

The investment properties of the Group were determined as industrial properties in Mainland China, based on the nature, characteristics and risks of each property. The investment properties of the Group were revalued on 31 March 2023 based on valuations performed by Cushman & Wakefield Limited, an independent firm of professionally qualified valuers, at HK$332,866,000 (2022: HK$359,296,000). Each year, the Group's management decides to appoint which external valuer to be responsible for the external valuations of the Group's properties. Selection criteria include market knowledge, reputation, independence and whether professional standards are maintained. The Group's management has discussions with the valuer on the valuation assumptions and valuation results once a year when the valuation is performed for annual financial reporting.

投資物業乃根據經營租賃租予第三方，有關概要之進一步詳情載於財務報表附註16。

The investment properties are leased to third parties under operating leases, further summary details of which are included in note 16 to the financial statements.

本集團投資物業之進一步詳情載於第228頁。

Further particulars of the Group's investment properties are included on page 228.

15. 投資物業*(續)*

15. INVESTMENT PROPERTIES *(continued)*

公平值層級

Fair value hierarchy

下表列示本集團投資物業之公平值計量層級：

The following table illustrates the fair value measurement hierarchy of the Group's investment properties:

		於二零二三年三月三十一日的公平值計量採用 Fair value measurement as at 31 March 2023 using			
(港幣千元)	*(HK$'000)*	於活躍市場之報價（第一層） Quoted prices in active markets (Level 1)	重大可觀察輸入數據（第二層） Significant observable inputs (Level 2)	重大不可觀察輸入數據（第三層） Significant unobservable inputs (Level 3)	總計 Total
以下項目之經常性公平值計量：	Recurring fair value measurement for:				
工業物業	Industrial properties	–	–	332,866	332,866

		於二零二二年三月三十一日的公平值計量採用 Fair value measurement as at 31 March 2022 using			
(港幣千元)	*(HK$'000)*	於活躍市場之報價（第一層） Quoted prices in active markets (Level 1)	重大可觀察輸入數據（第二層） Significant observable inputs (Level 2)	重大不可觀察輸入數據（第三層） Significant unobservable inputs (Level 3)	總計 Total
以下項目之經常性公平值計量：	Recurring fair value measurement for:				
工業物業	Industrial properties	–	–	359,296	359,296

年內，第一層與第二層之間並無任何公平值計量轉撥，亦無從第三層轉入或轉出（二零二二年：無）。

During the year, there were no transfers of fair value measurements between Level 1 and Level 2 and no transfers into or out of Level 3 (2022: Nil).

15. 投資物業*(續)*

15. INVESTMENT PROPERTIES *(continued)*

公平值層級*(續)*

Fair value hierarchy *(continued)*

以下為投資物業估值所用估值方法及主要輸入數據之概要：

Below is a summary of the valuation techniques used and the key inputs to the valuation of investment properties:

	估值方法 Valuation techniques	重大不可觀察輸入數據 Significant unobservable inputs	加權平均值 Weighted average 2023	2022
工業物業 Industrial properties	投資方法 Investment method	年期租金（每月） Term rent (per month)	**港幣2,490,000元 HK$2,490,000**	港幣2,676,000元 HK$2,676,000
		年期收益率 Term yield (%)	**7**	7
		復歸租金（每月） Reversionary rent (per month)	**港幣2,177,000元 HK$2,177,000**	港幣2,355,000元 HK$2,355,000
		復歸收益率 Reversionary yield (%)	**7**	7

本集團工業物業之公平值乃使用投資方法，以現有租約的租金收入，並計及物業的可復歸潛在作出資本化。公平值計量與年期租金及復歸租金呈正相關關係以及與年期收益率及復歸收益率呈負相關關係。

The fair value of the Group's industrial properties is determined using the investment method, by capitalizing the rental income derived from the existing tenancy with due allowance for the reversionary potential of the property. The fair value measurement is positively correlated to the term rent and reversionary rent and negatively correlated to term yield and reversionary yield.

16. 租賃

本集團作為承租人

本集團就經營中使用的若干物業、辦公室設備及汽車訂有租賃合同。一次性付款已被提前作出，以向業主收購租賃土地，租期為五十至五十二年(二零二二年：五十至五十二年)，且根據該等土地租賃條款，將不會支付進一步款項。物業租賃之租賃期限一般介乎一至七年(二零二二年：介乎一至五年)，及汽車租賃之租賃期限一般介乎一至二年(二零二二年：介乎一至二年)。辦公室設備個別為低價值。

(a) 使用權資產

於年內本集團使用權資產的賬面值及變動如下：

16. LEASES

The Group as a lessee

The Group has lease contracts for certain of its properties, office equipment and motor vehicles used in its operations. Lump sum payments were made upfront to acquire the leased land from the owners with lease periods of 50 to 52 years (2022: 50 to 52 years), and no ongoing payments will be made under the terms of these land leases. Leases of properties generally have lease terms between 1 and 7 years (2022: between 1 and 5 years), while motor vehicles generally have lease terms between 1 and 2 years (2022: between 1 and 2 years). Office equipment is individually of low value.

(a) Right-of-use assets

The carrying amounts of the Group's right-of-use assets and the movements during the year are as follows:

(港幣千元)	*(HK$'000)*	租賃土地 Leasehold land	物業 Properties	汽車 Motor vehicles	總計 Total
於二零二一年四月一日	At 1 April 2021	33,213	1,660	202	35,075
添置	Additions	–	5,103	–	5,103
折舊支出	Depreciation charge	(1,141)	(1,433)	(155)	(2,729)
匯兑調整	Exchange realignment	1,026	669	5	1,700
於二零二二年三月三十一日及二零二二年四月一日	At 31 March 2022 and 1 April 2022	33,098	5,999	52	39,149
添置	Additions	–	16,278	–	16,278
出售	Disposals	(10,000)	–	–	(10,000)
折舊支出	Depreciation charge	(1,106)	(1,816)	(49)	(2,971)
匯兑調整	Exchange realignment	(1,703)	(388)	(3)	(2,094)
於二零二三年三月三十一日	At 31 March 2023	20,289	20,073	–	40,362

16. 租賃*(續)*

本集團作為承租人*(續)*

(b) 租賃負債

年內租賃負債的賬面值及變動如下：

16. LEASES *(continued)*

The Group as a lessee *(continued)*

(b) Lease liabilities

The carrying amount of lease liabilities and the movements during the year are as follows:

(港幣千元)	*(HK$'000)*	**2023**	2022
於四月一日之賬面值	Carrying amount at 1 April	**6,155**	1,968
新租賃	New leases	**15,678**	5,103
年內已確認利息增加	Accretion of interest recognized during the year	**477**	212
付款	Payments	**(1,988)**	(1,809)
匯兑調整	Exchange realignment	**(396)**	681
於三月三十一日之賬面值	Carrying amount at 31 March	**19,926**	6,155
分析為：	Analyzed into:		
流動部分	Current portion	**2,862**	1,599
非流動部分	Non-current portion	**17,064**	4,556
分析為：	Analyzed into:		
一年內	Within one year	**2,862**	1,599
第二年	In the second year	**3,197**	1,149
第三至第五年（首尾兩年包括在內）	In the third to fifth years, inclusive	**8,749**	3,407
五年後	Beyond five years	**5,118**	–
		19,926	6,155

租賃負債的到期分析披露於財務報表附註40。

The maturity analysis of lease liabilities is disclosed in note 40 to the financial statements.

16. 租賃(續)

本集團作為承租人(續)

(c) 於收益表確認的租賃相關款項如下：

16. LEASES (continued)

The Group as a lessee (continued)

(c) The amounts recognized in the income statement in relation to leases are as follows:

(港幣千元)	(HK$'000)	**2023**	2022
租賃負債利息	Interest on lease liabilities	**477**	212
使用權資產折舊支出	Depreciation charge of right-of-use assets	**2,971**	2,729
與短期租賃有關的支出（記入銷售成本、銷售及分銷支出以及行政支出）	Expense relating to short-term leases (included in cost of sales, selling and distribution expenses and administrative expenses)	**4,439**	4,448
與低價值資產租賃有關的支出(記入行政支出)	Expense relating to leases of low-value assets (included in administrative expenses)	**93**	47
於收益表確認的款項總額	Total amount recognized in the income statement	**7,980**	7,436

(d) 終止選擇權

本集團持有數張包含終止選擇權的租賃合同。管理層已就該等選擇權進行磋商，以靈活地管理租賃資產組合，並與本集團的業務需求保持一致。以下列出未包含在租賃條款內的終止選擇權的行使日期之後期間相關的未折現的潛在未來租金付款：

(d) Termination options

The Group had several lease contracts that included termination options. These options were negotiated by management to provide flexibility in managing the leased-asset portfolio and they were aligned with the Group's business needs. Set out below were the undiscounted potential future rental payments relating to periods following the exercise date of termination options that were not included in the lease terms:

(港幣千元)	(HK$'000)	**2023**	2022
預期將行使的終止選擇權	Termination options expected to be exercised		
五年內支付	Payable within five years	**–**	821

(e) 租賃的現金流出總額披露於財務報表附註34(c)。

(e) The total cash outflow for leases is disclosed in note 34(c) to the financial statements.

16. 租賃(續)

本集團作為出租人

本集團根據經營租賃安排於中華人民共和國(「中國」)出租若干部分自用物業及投資物業(附註14及15)，由工業物業組成。租賃條款一般要求承租人支付保證金，並根據當時市場狀況定期調整租金。年內，本集團的已確認租金收入為港幣35,065,000元(二零二二年：港幣30,799,000元)，詳情載於財務報表附註7。

於二零二三年三月三十一日，本集團根據與承租人訂立的不可撤銷經營租賃之未來期間的未折現應收租賃款項如下：

16. LEASES (continued)

The Group as a lessor

The Group leases certain parts of its owner-occupied properties and investment properties (notes 14 and 15) consisting of industrial properties in the People's Republic of China (the "PRC") under operating lease arrangements. The terms of the leases generally require the tenants to pay security deposits and provide for periodic rent adjustments according to the then prevailing market conditions. Rental income recognized by the Group during the year was HK$35,065,000 (2022: HK$30,799,000), details of which are included in note 7 to the financial statements.

At 31 March 2023, the undiscounted lease payments receivable by the Group in future periods under non-cancellable operating leases with its tenants are as follows:

(港幣千元)	*(HK$'000)*	**2023**	2022
一年內	Within one year	**41,466**	38,741
一年以上但兩年以內	After one year but within two years	**9,239**	36,727
兩年以上但三年以內	After two years but within three years	**974**	6,311
三年以上但四年以內	After three years but within four years	**691**	746
四年以上但五年以內	After four years but within five years	**634**	746
超過五年	After five years	**–**	684
		53,004	83,955

17. 商譽

17. GOODWILL

(港幣千元)	(HK$'000)	
於二零二一年四月一日，二零二二年三月三十一日，二零二二年四月一日及二零二三年三月三十一日	At 1 April 2021, 31 March 2022, 1 April 2022 and 31 March 2023	
成本	Cost	94,923
累計減值	Accumulated impairment	(43,018)
賬面淨值	Net carrying amount	51,905

商譽減值測試

由業務合併產生之商譽分配予本集團於中國順德之附屬公司，其為位於中國大陸及香港可報告經營分部之現金產生單位，從事製造及銷售注塑機及有關產品。該等附屬公司之可收回金額乃根據使用價值之計算釐定，計算所用的現金流量預測以五年財政預算為基礎。此使用價值計算的主要假設包括預期增長率及折現率。收益及成本之變動乃根據管理層經驗及對市場未來變化之預期。財政預算的制定反映了當年以及過去年度的表現、及發展的預期。現金流量預測所用的折現率定為15%(二零二二年：14%)(稅前)，以反映相關附屬公司之特定風險。五年期後之現金流量按增長率2%(二零二二年：2%)推算。

Impairment testing of goodwill

Goodwill acquired through business combinations is allocated to the Group's subsidiaries in Shunde, the PRC, which is a cash-generating unit ("CGU") under the reportable operating segment in Mainland China and Hong Kong and engaged in the manufacture and sale of plastic injection moulding machines and related products. The recoverable amount of the subsidiaries has been determined based on a value in use calculation using cash flow projections based on financial budgets covering a five-year period. The key assumptions for the value in use calculation include the expected growth rate and discount rate. Changes in revenue and costs are based on management experience and expectations of future changes in the market. The financial budgets are prepared reflecting current and prior years performance and development expectations. The discount rate applied to the cash flow projections is 15% (2022: 14%) which is before tax and reflects specific risks relating to the relevant subsidiaries. The cash flows beyond the 5-year period are extrapolated using a growth rate of 2% (2022: 2%).

18. 無形資產

18. INTANGIBLE ASSETS

二零二三年三月三十一日 31 March 2023

(港幣千元)	(HK$'000)	技術 Know-how
於二零二二年四月一日的成本，已扣除累計攤銷及減值	Cost at 1 April 2022, net of accumulated amortization and impairment	1,834
添置	Additions	2,296
本年度攤銷撥備	Amortization provided during the year	(419)
匯兑調整	Exchange realignment	(132)
於二零二三年三月三十一日之賬面淨值	Net carrying amount at 31 March 2023	3,579
於二零二三年三月三十一日	At 31 March 2023	
成本	Cost	4,184
累計攤銷及減值	Accumulated amortization and impairment	(605)
賬面淨值	Net carrying amount	3,579

二零二二年三月三十一日 31 March 2022

(港幣千元)	(HK$'000)	技術 Know-how
於二零二一年四月一日的成本，已扣除累計攤銷及減值	Cost at 1 April 2021, net of accumulated amortization and impairment	–
添置	Addition	2,038
本年度攤銷撥備	Amortization provided during the year	(203)
匯兑調整	Exchange realignment	(1)
於二零二二年三月三十一日之賬面淨值	Net carrying amount at 31 March 2022	1,834
於二零二二年三月三十一日	At 31 March 2022	
成本	Cost	2,038
累計攤銷及減值	Accumulated amortization and impairment	(204)
賬面淨值	Net carrying amount	1,834

19. 於聯營公司之投資

19. INVESTMENTS IN ASSOCIATES

(港幣千元)	(HK$'000)	**2023**	2022
應佔資產淨值	Share of net assets	**25,663**	28,529

應付聯營公司之賬款餘額為貿易相關、無抵押、免息及一般於三十天內支付。就此，於二零二三年三月三十一日，應付聯營公司賬款港幣17,741,000元(二零二二年：港幣10,984,000元)已記入應付貿易及票據賬款內，於財務報表附註26載列。

The balances due to the associates are trade related, unsecured, interest-free and are normally settled on a term of 30 days. Accordingly, as at 31 March 2023, the amounts due to associates of HK$17,741,000 (2022: HK$10,984,000) are included in the trade and bills payables, as disclosed in note 26 to the financial statements.

所有本集團之聯營公司均為於中國註冊及於中國大陸經營之企業法人。

All of the Group's associates are corporate entities registered in the PRC and operating in Mainland China.

聯營公司之詳細資料如下：

Particulars of the associates are as follows:

名稱 **Name**	**實收註冊資本** **Paid-up registered capital**	**本集團應佔權益百分比** **Percentage of ownership interest attributable to the Group**	**主要業務** **Principal activities**
佛山市富雄鑄造廠有限公司[(1), (2)] Foshan Fu Xiong Foundry Co., Ltd. [(1), (2)]	1,520,000美元 US$1,520,000	25	製造及銷售球墨鑄鐵產品 Manufacture and sale of iron casting products
佛山市順德區富雄機械製造有限公司[(1), (2)] Foshan Shunde Fu Xiong Machinery Company, Limited [(1), (2)]	800,000美元 US$800,000	25	無經營活動 Dormant

附註：

(1) 上述公司以三月三十一日為其報告日期，以符合其控股公司之報告日期。

(2) 英文公司名稱僅供識別。

Notes:

(1) The above companies use 31 March as their reporting date to conform with their holding company's reporting date.

(2) The English company name is translated for identification purposes only.

19. 於聯營公司之投資*(續)*

19. INVESTMENTS IN ASSOCIATES *(continued)*

下表列示本集團個別並非重大的聯營公司的財務資訊總額：

The following table illustrates the aggregate financial information of the Group's associates that are not individually material:

(港幣千元)	*(HK$'000)*	**2023**	2022
佔聯營公司年度溢利／(虧損)	Share of the associates' profit/(loss) for the year	**(914)**	777
佔聯營公司其他全面收益／(支出)	Share of the associates' other comprehensive income/(expenses)	**(1,952)**	1,294
佔聯營公司總全面收益／(支出)	Share of the associates' total comprehensive income/(expenses)	**(2,866)**	2,071
本集團於聯營公司投資賬面值總額	Aggregate carrying amount of the Group's investments in the associates	**25,663**	28,529

20. 存貨

20. INVENTORIES

(港幣千元)	*(HK$'000)*	**2023**	2022
原料	Raw materials	**229,481**	299,049
在製品	Work in progress	**242,790**	289,374
製成品	Finished goods	**319,492**	473,477
		791,763	1,061,900

21. 應收貿易及票據賬款

21. TRADE AND BILLS RECEIVABLES

(港幣千元)	*(HK$'000)*	**2023**	2022
應收貿易賬款	Trade receivables	**1,117,396**	976,207
減值	Impairment	**(92,297)**	(98,368)
應收貿易賬款淨額	Trade receivables, net	**1,025,099**	877,839
應收票據賬款	Bills receivable	**454,352**	467,564
應收貿易及票據賬款總計	Total trade and bills receivables	**1,479,451**	1,345,403
部分分類為非流動部分	Portion classified as non-current portion	**(82,200)**	(99,985)
流動部分	Current portion	**1,397,251**	1,245,418

客戶之貿易條款一般為現金交易、銀行票據及信用放貸。本集團根據個別客戶之商業實力及信譽給予客戶信貸額，信貸期一般為三十天至一百八十天。本集團採取嚴格政策控制信貸條款及應收賬款，務求信貸風險降至最低。

基於上述的觀點及本集團的應收貿易及票據賬款由大量分散客戶所組成，故沒有重大的集中信貸風險。本集團並無就該等結餘持有任何抵押或其他加強信用之物品。除應收貿易賬款港幣90,826,000元(二零二二年：港幣128,268,000元)以平均年利率6.2%(二零二二年：6.2%)計息及信貸期一般為十二個月至三十六個月(二零二二年：十二個月至三十六個月)外，剩餘之應收貿易及票據賬款並不附利息。

Trading terms with customers are either cash on delivery, bank bills or on credit. The Group grants credit to customers based on their respective business strength and creditability, with credit periods of 30 days to 180 days in general. The Group adopts strict control policies over credit terms and receivables that serve to minimize credit risk.

In view of the aforementioned and the fact that the Group's trade and bills receivables relate to a large number of diversified customers, there is no significant concentration of credit risk. The Group does not hold any collateral or other credit enhancements over these balances. Except for the trade receivables of HK$90,826,000 (2022: HK$128,268,000) which are interest-bearing at an average interest rate of 6.2% (2022: 6.2%) per annum and with credit periods of 12 months to 36 months (2022: 12 months to 36 months) in general, the remaining trade and bills receivables are non-interest-bearing.

21. 應收貿易及票據賬款*(續)*

21. TRADE AND BILLS RECEIVABLES *(continued)*

於二零二三年三月三十一日，本集團已質押應收票據賬款港幣93,639,000元(二零二二年：港幣98,162,000元)用作擔保發出給予供應商的銀行承兑匯票，該等匯票記入應付貿易及票據賬款內。

As at 31 March 2023, the Group has pledged bills receivable of HK$93,639,000 (2022: HK$98,162,000) to secure the issuance of bank acceptance notes, included in the trade and bills payables, to suppliers.

於報告期末之應收貿易賬款按發票日期及扣除虧損撥備計算之賬齡分析如下：

The ageing analysis of the trade receivables as at the end of the reporting period, based on the invoice date and net of loss allowance, is as follows:

(港幣千元)	*(HK$'000)*	**2023**	2022
九十天內	Within 90 days	**337,415**	297,820
九十一至一百八十天	91 to 180 days	**202,952**	159,723
一百八十一至三百六十五天	181 to 365 days	**319,359**	232,306
超過一年	Over 1 year	**165,373**	187,990
		1,025,099	877,839

應收貿易賬款虧損撥備變動如下：

The movements in the loss allowance for trade receivables are as follows:

(港幣千元)	*(HK$'000)*	**2023**	2022
於年初	At beginning of year	**98,368**	92,035
已於收益表扣除的減值虧損／(計入的減值虧損撥回)的淨額*(附註7)*	Impairment losses charged/(write-back of impairment losses credited) to the income statement, net *(note 7)*	**(1,293)**	3,551
註銷不能收回的金額	Amounts written off as uncollectible	**(104)**	(115)
匯兑調整	Exchange realignment	**(4,674)**	2,897
於年末	At end of year	**92,297**	98,368

於二零二三年三月三十一日，虧損撥備減少乃主要由於匯兑調整虧損所致。

As at 31 March 2023, the decrease in the loss allowance was mainly due to the debit exchange realignment.

於二零二二年三月三十一日，虧損撥備增加乃主要由於逾期超過一百八十天的應收貿易賬款增加所致。

As at 31 March 2022, the increase in the loss allowance was mainly due to the increase in trade receivables which were past due over 180 days.

21. 應收貿易及票據賬款*(續)*

於各報告日期採用撥備矩陣進行減值分析，以計量預期信貸虧損。撥備率乃基於具有類似虧損模式的多個客戶分部組別的逾期日數釐定。該計算反映或然率加權結果、貨幣時值及於報告日期可得的有關過往事項、當前狀況及未來經濟狀況預測的合理及可靠資料。

下表載列使用撥備矩陣計算的本集團應收貿易賬款的信貸風險資料：

於二零二三年三月三十一日

			逾期 Past due			
		即期 Current	少於九十天 Less than 90 days	九十一至一百八十天 91 to 180 days	超過一百八十天 Over 180 days	總計 Total
預期信貸虧損率	Expected credit loss rate	0%	2%	3%	62%	8%
賬面值總額*(港幣千元)*	Gross carrying amount *(HK$'000)*	778,276	121,832	81,148	136,140	1,117,396
預期信貸虧損*(港幣千元)*	Expected credit losses *(HK$'000)*	2,785	3,016	2,293	84,203	92,297

21. TRADE AND BILLS RECEIVABLES *(continued)*

An impairment analysis is performed at each reporting date using a provision matrix to measure ECLs. The provision rates are based on days past due for groupings of various customer segments with similar loss patterns. The calculation reflects the probability-weighted outcome, the time value of money and reasonable and supportable information that is available at the reporting date about past events, current conditions and forecasts of future economic conditions.

Set out below is the information about the credit risk exposure on the Group's trade receivables using a provision matrix:

At 31 March 2023

			逾期 Past due			
		即期 Current	少於九十天 Less than 90 days	九十一至一百八十天 91 to 180 days	超過一百八十天 Over 180 days	總計 Total
預期信貸虧損率	Expected credit loss rate	0%	2%	3%	62%	8%
賬面值總額*(港幣千元)*	Gross carrying amount *(HK$'000)*	778,276	121,832	81,148	136,140	1,117,396
預期信貸虧損*(港幣千元)*	Expected credit losses *(HK$'000)*	2,785	3,016	2,293	84,203	92,297

於二零二二年三月三十一日

At 31 March 2022

			逾期 Past due			
		即期 Current	少於九十天 Less than 90 days	九十一至一百八十天 91 to 180 days	超過一百八十天 Over 180 days	總計 Total
預期信貸虧損率	Expected credit loss rate	0%	5%	6%	66%	10%
賬面值總額*(港幣千元)*	Gross carrying amount *(HK$'000)*	625,634	148,765	72,051	129,757	976,207
預期信貸虧損*(港幣千元)*	Expected credit losses *(HK$'000)*	–	7,651	4,540	86,177	98,368

21. 應收貿易及票據賬款(續)

21. TRADE AND BILLS RECEIVABLES (continued)

於報告期末之應收票據賬款之到期日分析如下：

The maturity dates of the bills receivable as at the end of the reporting period are analyzed as follows:

(港幣千元)	(HK$'000)	**2023**	2022
九十天內	Within 90 days	**207,753**	167,299
九十一至一百八十天	91 to 180 days	**199,159**	210,324
一百八十一至三百六十五天	181 to 365 days	**33,000**	75,230
超過一年	Over 1 year	**14,440**	14,711
		454,352	467,564

於二零二三年三月三十一日，應收票據賬款並無逾期或減值(二零二二年：無)。上述結餘中的金融資產概無涉及近期違約紀錄及逾期款項之應收賬款。預期信貸虧損乃參考本集團過往虧損記錄使用虧損率法估計。虧損率將於適時調整以反映當前狀況及未來經濟狀況預測。本集團並無提撥虧損撥備，乃由於管理層估計於二零二三年三月三十一日及二零二二年三月三十一日的預期信貸虧損為最小。

As at 31 March 2023, none of the bills receivables is either past due or impaired (2022: Nil). The financial assets included in the above balances relate to receivables for which there was no recent history of default and past due amounts. The ECLs are estimated by applying a loss rate approach with reference to the historical loss record of the Group. The loss rate is adjusted to reflect the current conditions and forecasts of future economic conditions, as appropriate. No loss allowance was provided because management estimated that the ECLs as at 31 March 2023 and 31 March 2022 were minimal.

22. 訂金、預付款項及其他應收賬款

22. DEPOSITS, PREPAYMENTS AND OTHER RECEIVABLES

(港幣千元)	(HK$'000)	**2023**	2022
訂金及預付款項	Deposits and prepayments	**88,214**	120,682
其他應收賬款	Other receivables	**40,077**	38,820
減：減值	Less: Impairment	**(16,947)**	(18,239)
應收稅項	Tax recoverable	**–**	18
		111,344	141,281

22. 訂金、預付款項及其他應收賬款*(續)*

22. DEPOSITS, PREPAYMENTS AND OTHER RECEIVABLES *(continued)*

訂金及預付款項以及其他應收賬款減值撥備變動如下：

The movements in impairment allowance for deposits and prepayments and other receivables are as follows:

(港幣千元)	*(HK$'000)*	**2023**	2022
於年初	At beginning of year	**18,239**	17,614
已於收益表計入的減值虧損撥回的淨額*(附註7)*	Write-back of impairment losses credited to the income statement, net *(note 7)*	**–**	(86)
匯兑調整	Exchange realignment	**(1,292)**	711
於年末	At end of year	**16,947**	18,239

一般而言，本集團計量相等於其他應收款項的十二個月預期信貸虧損的虧損撥備。可收回性乃參考債務人信貸狀況作評估。除其他應收賬款港幣16,947,000元(二零二二年：港幣18,239,000元)外，結餘中的金融資產概無涉及近期違約記錄及逾期款項之應收賬款。於二零二三年三月三十一日及二零二二年三月三十一日的剩餘結餘的預期信貸虧損被評估為最小。

Generally, the Group measures the loss allowance equal to 12-month ECLs of other receivables. The recoverability was assessed with reference to the credit status of the debtors. Except for other receivables of HK$16,947,000 (2022: HK$18,239,000), the financial assets included in these balances relate to receivables for which there was no recent history of default and past due amounts. The ECLs of the remaining balances as at 31 March 2023 and 31 March 2022 were assessed to be minimal.

在上述其他應收賬款減值撥備中包括對已作個別減值其他應收賬款撥備港幣16,947,000元(二零二二年：港幣18,239,000元)，其於撥備前之賬面值為港幣17,167,000元(二零二二年：港幣18,474,000元)。

Included in the above impairment allowance for other receivables is an allowance for individually impaired other receivables of HK$16,947,000 (2022: HK$18,239,000) with a gross carrying amount before provision of HK$17,167,000 (2022: HK$18,474,000).

23. 應收融資租賃賬款

本集團租賃若干注塑機予客戶。該等租賃分類為融資租賃及其剩餘租期為介乎一個月至十五個月(二零二二年：一個月至十四個月)。客戶於融資租賃租期完結時，將購買已租賃之注塑機。

23. FINANCE LEASE RECEIVABLES

The Group leases certain of its injection moulding machines to its customers. These leases are classified as finance leases and have remaining lease terms ranging from 1 month to 15 months (2022: 1 month to 14 months). The customers shall purchase the leased injection moulding machines at the end of the lease terms of the finance leases.

(港幣千元)	*(HK$'000)*	**2023**	2022
應收融資租賃賬款	Finance lease receivables	**6,104**	10,501
減值	Impairment	**(4,488)**	(5,819)
應收融資租賃賬款淨額	Finance lease receivables, net	**1,616**	4,682
部分分類為非流動部分	Portion classified as non-current portion	**(202)**	(371)
流動部分	Current portion	**1,414**	4,311

於報告期末之根據融資租賃的未來最少應收租賃款項總額及彼等現值分析如下：

The total future minimum lease receivables under finance leases and their present values as at the end of the reporting period are analyzed as follows:

		最少應收租賃款項 Minimum lease receivables		最少應收租賃款項的現值 Present value of minimum lease receivables	
(港幣千元)	*(HK$'000)*	**2023**	2022	**2023**	2022
應收款項：	Amounts receivable:				
一年內	Within one year	**1,492**	4,476	**1,414**	4,311
第二年	In the second year	**206**	375	**202**	371
最少應收融資租賃款項總計	Total minimum finance lease receivables	**1,698**	4,851	**1,616**	4,682
未賺取財務收入	Unearned finance income	**(82)**	(169)		
應收融資租賃款項淨額總計	Total net finance lease receivables	**1,616**	4,682		
部分分類為流動資產	Portion classified as current assets	**(1,414)**	(4,311)		
非流動部分	Non-current portion	**202**	371		

截至二零二三年三月三十一日止年度內並無或然收入被確認(二零二二年：無)。

No contingent income was recognized during the year ended 31 March 2023 (2022: Nil).

23. 應收融資租賃賬款*(續)*

23. FINANCE LEASE RECEIVABLES *(continued)*

應收融資租賃賬款虧損撥備變動如下：

The movements in the loss allowance for finance lease receivables are as follows:

(港幣千元)	*(HK$'000)*	**2023**	2022
於年初	At beginning of year	**5,819**	7,499
已於收益表計入的減值虧損撥回的淨額*(附註7)*	Write-back of impairment losses credited to the income statement, net *(note 7)*	**(846)**	(2,023)
匯兑調整	Exchange realignment	**(485)**	343
於年末	At end of year	**4,488**	5,819

於各報告日期採用撥備矩陣進行減值分析，以計量預期信貸虧損。撥備率乃基於具有類似虧損模式的多個客戶分部組別的逾期日數釐定。該計算反映或然率加權結果、貨幣時值及於報告日期可得的有關過往事項、當前狀況及未來經濟狀況預測的合理及可靠資料。

An impairment analysis is performed at each reporting date using a provision matrix to measure ECLs. The provision rates are based on days past due for groupings of various customer segments with similar loss patterns. The calculation reflects the probability-weighted outcome, the time value of money and reasonable and supportable information that is available at the reporting date about past events, current conditions and forecasts of future economic conditions.

下表載列使用撥備矩陣計算的本集團應收融資租賃賬款的信貸風險資料：

Set out below is the information about the credit risk exposure on the Group's finance lease receivables using a provision matrix:

於二零二三年三月三十一日

At 31 March 2023

			逾期 Past due			
		即期 Current	少於九十天 Less than 90 days	九十一至一百八十天 91 to 180 days	超過一百八十天 Over 180 days	總計 Total
預期信貸虧損率	Expected credit loss rate	0%	0%	0%	100%	74%
賬面值總額*(港幣千元)*	Gross carrying amount *(HK$'000)*	1,374	223	19	4,488	6,104
預期信貸虧損*(港幣千元)*	Expected credit losses *(HK$'000)*	–	–	–	4,488	4,488

23. 應收融資租賃賬款*(續)*

23. FINANCE LEASE RECEIVABLES *(continued)*

於二零二二年三月三十一日

At 31 March 2022

			逾期 Past due			
		即期 Current	少於九十天 Less than 90 days	九十一至一百八十天 91 to 180 days	超過一百八十天 Over 180 days	總計 Total
預期信貸虧損率	Expected credit loss rate	0%	26%	69%	100%	55%
賬面值總額*(港幣千元)*	Gross carrying amount *(HK$'000)*	3,725	1,152	286	5,338	10,501
預期信貸虧損*(港幣千元)*	Expected credit losses *(HK$'000)*	–	305	196	5,318	5,819

24. 抵押銀行存款

24. PLEDGED BANK DEPOSITS

(港幣千元)	*(HK$'000)*	**2023**	2022
抵押銀行存款，非流動部分	Pledged bank deposits, non-current portion	**1,353**	2,851
抵押銀行存款，流動部分	Pledged bank deposits, current portion	**24,490**	24,400
		25,843	27,251

結存包括若干附屬公司所持之抵押銀行存款，其中港幣2,856,000元(二零二二年：港幣3,082,000元)用作擔保於中國大陸銀行給予客戶作購買本集團產品的銀行貸款；及港幣22,987,000元(二零二二年：港幣24,169,000元)用作擔保發出給予供應商的銀行承兑匯票，該等匯票記入應付貿易及票據賬款內。

Balances included pledged bank deposits of certain subsidiaries, including HK$2,856,000 (2022: HK$3,082,000) for securing bank loans granted by banks in Mainland China to customers to purchase the Group's products, and HK$22,987,000 (2022: HK$24,169,000) for securing the issuance of bank acceptance notes which are included in the trade and bills payables, to suppliers.

抵押銀行存款存放於並無近期違約紀錄之有信譽銀行。

The pledged bank deposits are deposited with creditworthy banks with no recent history of default.

25. 現金及銀行結存

25. CASH AND BANK BALANCES

(港幣千元)	(HK$'000)	2023	2022
現金及銀行結存	Cash and bank balances	**346,249**	583,503
於存款時距離原期滿日不足三個月之銀行存款	Bank deposits with original maturity of less than three months when acquired	**298,413**	88,408
總現金及銀行結存	Total cash and bank balances	**644,662**	671,911

於二零二三年三月三十一日，本集團以人民幣計值之現金及銀行結存為約港幣214,878,000元(二零二二年：港幣269,492,000元)。人民幣不能自由兑換為其他貨幣，惟根據中國大陸外匯管理條例及結匯、售匯及付匯管理規定，本集團可透過獲准經營外匯業務之銀行將人民幣兑換為其他貨幣。

As at 31 March 2023, the cash and bank balances of the Group denominated in Renminbi ("RMB") amounted to approximately HK$214,878,000 (2022: HK$269,492,000). RMB is not freely convertible into other currencies. However, under the Mainland China's Foreign Exchange Control Regulations and Administration of Settlement, and Sale and Payment of Foreign Exchange Regulations, the Group is permitted to exchange RMB for other currencies through banks authorized to conduct foreign exchange business.

銀行存款以銀行每日存款浮動利率賺取利息。視乎本集團現金的需求，而定立由七天至三個月(二零二二年：七天至三個月)不等的定期存款，並以各自的定期存款息率賺取利息。銀行結存存放於並無近期違約紀錄之有信譽銀行。於二零二二年三月三十一日，現金及銀行結存包括活期存款港幣110,877,000元。該活期存款訂立由一年至兩年不等的年期。提早取出該活期存款並無罰息或限制。該活期存款持有之目的乃應付短期現金承諾。

The cash at banks earns interest at floating rates based on daily bank deposit rates. The time deposits are made for varying periods of between 7 days and 3 months (2022: 7 days and 3 months) depending on the immediate cash requirements of the Group, and earn interest at the respective time deposit rates. The bank balances are deposited with creditworthy banks with no recent history of default. As at 31 March 2022, included in the cash and bank balances were demand deposits of HK$110,877,000. The demand deposits were made for varying periods of between 1 year and 2 years. There was no penalty for or restriction on early withdrawal of the demand deposits. The demand deposits were held for the purpose of meeting short-term cash commitments.

26. 應付貿易及票據賬款

於報告期末之應付貿易及票據賬款按發票日期計算之賬齡分析如下：

26. TRADE AND BILLS PAYABLES

The ageing analysis of the trade and bills payables as at the end of the reporting period, based on the invoice date, is as follows:

(港幣千元)	(HK$'000)	**2023**	2022
九十天內	Within 90 days	**370,423**	384,486
九十一至一百八十天	91 to 180 days	**169,849**	225,315
一百八十一至三百六十五天	181 to 365 days	**68,008**	71,323
超過一年	Over 1 year	**15,087**	14,570
		623,367	695,694

應付貿易及票據賬款並不附利息及一般三至六個月內結算。應付貿易及票據賬款當中包括應付聯營公司款項港幣17,741,000元(二零二二年：港幣10,984,000元)，其付款條款為三十天內支付。

The trade and bills payables are non-interest-bearing and are normally settled on terms of 3 to 6 months. Included in the trade and bills payables are trade payables of HK$17,741,000 (2022: HK$10,984,000) due to associates which are repayable within 30 days.

27. 其他應付賬款、應計負債及合約負債

27. OTHER PAYABLES, ACCRUALS AND CONTRACT LIABILITIES

(港幣千元)	(HK$'000)	附註 Notes	**2023**	2022
合約負債	Contract liabilities	(a)	**83,390**	114,040
其他應付賬款及應計負債	Other payables and accruals	(b)	**237,879**	246,410
其他應付賬款、應計負債及合約負債總計	Total other payables, accruals and contract liabilities		**321,269**	360,450
部分分類為非流動部分	Portion classified as non-current portion		**(6,364)**	(11,674)
流動部分	Current portion		**314,905**	348,776

27. 其他應付賬款、應計負債及合約負債 *(續)*

附註：

(a) 合約負債包括交付貨品的預收款。於二零二一年四月一日的合約負債為港幣141,359,000元。合約負債於二零二三年及二零二二年減少主要由於於年終就銷售貨品而向客戶收取的預收款減少。

(b) 記入其他應付賬款及應計負債的金融負債並不附利息。

於二零二二年三月三十一日，其他應付賬款及應計負債當中包括跟可能土地發展計劃之框架協議相關之合作誠意金港幣12,330,000元，詳情載於本公司於二零一八年十一月二十八日之公告內。截至二零二三年三月三十一日止年度內，該合作誠意金於框架協議終止後已退回，詳情載於本公司於二零二二年七月六日之公告內。

27. OTHER PAYABLES, ACCRUALS AND CONTRACT LIABILITIES *(continued)*

Notes:

(a) Contract liabilities include advances received to deliver goods. The contract liabilities as at 1 April 2021 amounted to HK$141,359,000. The decrease in contract liabilities in 2023 and 2022 was mainly due to the decrease in advances received from customers in relation to the sale of goods at the end of the year.

(b) The financial liabilities included in other payables and accruals are non-interest-bearing.

As at 31 March 2022, included in the other payables and accruals was earnest money of HK$12,330,000 in relation to a framework agreement for a possible land development plan as detailed in the Company's announcement dated 28 November 2018. During the year ended 31 March 2023, the earnest money was refunded after the termination of the framework agreement as detailed in the Company's announcement dated 6 July 2022.

28. 計息銀行貸款

28. INTEREST-BEARING BANK BORROWINGS

(港幣千元)	*(HK$'000)*	**實際利率 Effective interest rate (%)**	**到期 Maturity**	**2023**	2022
銀行貸款償還期一年內，無抵押	Bank loans repayable within one year, unsecured	Nil (2022: 1.1)	Nil (2022: 2022)	–	21,568

於二零二二年三月三十一日，本集團之無抵押銀行貸款以浮動利率計息。

As at 31 March 2022, the Group's unsecured bank loans were at floating rates.

29. 定額福利計劃

本集團在台灣之附屬公司設立舊計劃，提供於二零零五年七月一日勞工退休金條例實施前已獲台灣之附屬公司聘用之絕大部分僱員。根據舊計劃，僱員有權每年按照累計基點享有退休福利，累計基點乃按服務年數釐定，最多為45點。直至五十五至六十五歲之退休年齡時，按累計基點乘以最後六個月的平均月薪計算。

舊計劃要求本集團每月向該退休準備金供款，該退休準備金由委員會管理，並以委員會之名義存入一間經政府批准擔當信託人之金融機構。該資產由信託人持有，與本集團的資產單獨分開。委員會負責確定該計劃的投資策略。

該計劃受利率風險、退休金受益人的壽命變動風險，股本市場風險及信貸風險的影響。

最近期之計劃資產及定額福利責任現值精算估值，乃由台灣精算學會認可之合資格精算師鉅璇資產管理顧問股份有限公司於二零二三年三月三十一日進行，乃以預計單位基數精算估值法計算。

於報告期末之主要精算假設如下：

29. DEFINED BENEFIT PLAN

The Group's subsidiaries in Taiwan operate the Old Scheme, covering substantially all of its employees who were recruited by the Taiwanese subsidiaries before the implementation of the Labour Act on 1 July 2005. Under the Old Scheme, the employees are entitled to retirement benefits annually based on an accumulated base point, which is determined based on their years of service, with a maximum of 45 points multiplied by the average monthly salary for the final six months of employment on attainment of a retirement age ranging from 55 to 65.

The Old Scheme requires the Group to make monthly contributions to the retirement fund. The fund is administered by the Committee and is deposited under the Committee's name with a government approved financial institution, which acts as the trustee. The assets held by the trustee are separated from those of the Group. The Committee is responsible for the determination of the investment strategy of the scheme.

The scheme is exposed to interest rate risk, the risk of changes in the life expectancy for pensioners, equity market risk and credit risk.

The most recent actuarial valuations of the plan assets and the present value of the defined benefit obligations were carried out on 31 March 2023 by Greatfine Wealth Management Consulting Inc., a qualified actuary recognized by the Actuarial Institute in Taiwan, using the projected unit credit actuarial valuation method.

The principal actuarial assumptions used as at the end of the reporting period are as follows:

		2023	2022
折現率	Discount rate	**1.1%**	0.9%
預期薪金增長率	Expected rate of salary increase	**1.0%**	1.0%

29. 定額福利計劃*(續)*

精算估值顯示計劃資產的市值為港幣13,972,000元(二零二二年:港幣13,526,000元),且這些資產的精算價值佔為符合條件員工計提的福利的123%(二零二二年:109%)。盈餘為港幣2,611,000元並預期於剩餘服務期十三年消除。

下表為報告期末所使用的重大假設的定量敏感性分析:

29. DEFINED BENEFIT PLAN *(continued)*

The actuarial valuation showed that the market value of plan assets was HK$13,972,000 (2022: HK$13,526,000) and that the actuarial value of these assets represented 123% (2022: 109%) of the benefits that had accrued to qualifying employees. The surplus of HK$2,611,000 is expected to be cleared over the remaining service period of 13 years.

A quantitative sensitivity analysis for significant assumptions as at the end of the reporting period is shown below:

		2023			
(港幣千元)	*(HK$'000)*	比率增加 Increase in rate %	定額福利責任增加/(減少) Increase/(decrease) of defined benefit obligations	比率減少 Decrease in rate %	定額福利責任增加/(減少) Increase/(decrease) of defined benefit obligations
折現率	Discount rate	0.5	(234)	(0.5)	267
未來薪金增長	Future salary increase	0.5	266	(0.5)	(235)

		2022			
(港幣千元)	*(HK$'000)*	比率增加 Increase in rate %	定額福利責任增加/(減少) Increase/(decrease) of defined benefit obligations	比率減少 Decrease in rate %	定額福利責任增加/(減少) Increase/(decrease) of defined benefit obligations
折現率	Discount rate	0.5	(305)	(0.5)	508
未來薪金增長	Future salary increase	0.5	504	(0.5)	(306)

29. 定額福利計劃(續)

上述敏感性分析，乃根據關鍵假設在報告期末時發生合理變動時對定額福利責任的影響的推斷。敏感性分析乃根據重大假設變動，同時所有其他假設維持不變而釐定。敏感性分析可能並不代表定額福利責任之實際變動，因為假設不太可能孤立於其他假設出現變動。

29. DEFINED BENEFIT PLAN (continued)

The sensitivity analysis above has been determined based on a method that extrapolates the impact on defined benefit obligations as a result of reasonable changes in key assumptions occurring at the end of the reporting period. The sensitivity analysis is based on a change in a significant assumption, keeping all other assumptions constant. The sensitivity analysis may not be representative of an actual change in the defined benefit obligations as it is unlikely that changes in assumptions would occur in isolation of one another.

在綜合收益表中確認的有關計劃費用／(收入)總額如下：

The total expenses/(income) recognized in the consolidated income statement in respect of the scheme are as follows:

(港幣千元)	(HK$'000)	2023	2022
當期服務成本	Current service cost	**66**	113
利息成本淨額	Interest cost, net	**(9)**	8
淨福利費用	Net benefit expenses	**57**	121

定額福利責任及計劃資產的公平值之變動如下：

The movements in the defined benefit obligations and the fair value of plan assets are as follows:

			2023										
			於收益表扣除的退休成本 Pension cost charged to the income statement				計入其他全面收益的重新計量虧損/(溢利) Remeasurement losses/(gains) in other comprehensive income						
(港幣千元)	(HK$'000)	於二零二二年四月一日 At 1 April 2022	當期服務成本 Current service cost	利息費用淨額 Net interest expense	計入收益表小計 Subtotal included in the income statement	已付福利 Benefit paid	人口統計假設變化引起的精算變動 Actuarial changes arising from changes in demographic assumptions	財務假設變化引起的精算變動 Actuarial changes arising from changes in financial assumptions	經驗調整 Experience adjustments	計入其他全面收益小計 Subtotal included in other comprehensive income	僱主繳存 Contribution by employer	匯兑調整 Exchange realignment	於二零二三年三月三十一日 At 31 March 2023
定額福利責任	Defined benefit obligations	12,465	66	105	171	(401)	5	(120)	(38)	(153)	–	(721)	11,361
計劃資產公平值	Fair value of plan assets	(13,526)	–	(114)	(114)	401	–	–	(104)	(104)	(1,420)	791	(13,972)
福利資產	Benefit asset	(1,061)	66	(9)	57	–	5	(120)	(142)	(257)	(1,420)	70	(2,611)

29. 定額福利計劃(續)

29. DEFINED BENEFIT PLAN (continued)

			2022										
			於收益表扣除的退休成本 Pension cost charged to the income statement				計入其他全面收益的重新計量虧損/(溢利) Remeasurement losses/(gains) in other comprehensive income						
(港幣千元)	(HK$'000)	於二零二一年四月一日 At 1 April 2021	當期服務成本 Current service cost	利息費用淨額 Net interest expense	計入收益表小計 Subtotal included in the income statement	已付福利 Benefit paid	人口統計假設變化引起的精算變動 Actuarial changes arising from changes in demographic assumptions	財務假設變化引起的精算變動 Actuarial changes arising from changes in financial assumptions	經驗調整 Experience adjustments	計入其他全面收益小計 Subtotal included in other comprehensive income	僱主繳存 Contribution by employer	匯兑調整 Exchange realignment	於二零二二年三月三十一日 At 31 March 2022
定額福利責任	Defined benefit obligations	23,306	113	105	218	(11,414)	(7)	(447)	523	69	–	286	12,465
計劃資產公平值	Fair value of plan assets	(21,514)	–	(97)	(97)	11,414	–	–	(1,430)	(1,430)	(1,671)	(228)	(13,526)
福利負債/(資產)	Benefit liability/(asset)	1,792	113	8	121	–	(7)	(447)	(907)	(1,361)	(1,671)	58	(1,061)

本集團計劃資產總額之公平值主要分類如下：

The major categories of the fair value of the total plan assets of the Group are as follows:

		2023	2022
現金及現金等價物	Cash and cash equivalents	**16%**	19%
股本工具	Equity instruments	**73%**	70%
債務工具	Debt instruments	**11%**	11%
		100%	100%

本集團預期於下個財政年度內對定額福利計劃作出供款港幣1,242,000元(二零二二年：港幣1,498,000元)。

The Group expects to make a contribution of HK$1,242,000 (2022: HK$1,498,000) to the defined benefit scheme during the next financial year.

於報告期末，定額福利責任之平均持續時間為四年(二零二二年：七年)。

The average duration of the defined benefit obligations at the end of the reporting period is 4 years (2022: 7 years).

30. 遞延稅項

於年內，遞延稅項負債及資產變動如下：

遞延稅項負債

30. DEFERRED TAX

The movements in deferred tax liabilities and assets during the year are as follows:

Deferred tax liabilities

(港幣千元)	*(HK$'000)*	物業重估 Revaluation of properties	撥備及超過相關折舊的折舊免稅額 Provisions and depreciation allowance in excess of related depreciation	扣繳稅 Withholding tax	總計 Total
於二零二一年四月一日	At 1 April 2021	48,578	9,580	39,141	97,299
本年度於收益表扣除／(計入)之遞延稅項淨額*(附註11)*	Deferred tax charged/(credited) to the income statement during the year, net *(note 11)*	3,452	1,997	(13,293)	(7,844)
附屬公司調回利潤之扣繳稅	Withholding tax on repatriation of earnings from subsidiaries	–	–	(14,834)	(14,834)
匯兑調整	Exchange realignment	2,045	476	762	3,283
於二零二二年三月三十一日及二零二二年四月一日	At 31 March 2022 and 1 April 2022	54,075	12,053	11,776	77,904
本年度於收益表扣除之遞延稅項淨額*(附註11)*	Deferred tax charged to the income statement during the year, net *(note 11)*	–	2,756	2,112	4,868
匯兑調整	Exchange realignment	(3,977)	(913)	(702)	(5,592)
於二零二三年三月三十一日之確認於綜合財務狀況表遞延稅項負債淨值	Net deferred tax liabilities recognized in the consolidated statement of financial position at 31 March 2023	50,098	13,896	13,186	77,180

30. 遞延稅項*(續)*

30. DEFERRED TAX *(continued)*

遞延稅項資產

Deferred tax assets

(港幣千元)	*(HK$'000)*	撥備 **Provisions**	遞延收益 **Deferred revenue**	總計 **Total**
於二零二一年四月一日	At 1 April 2021	37,961	112	38,073
本年度於收益表計入之遞延稅項淨額*(附註11)*	Deferred tax credited to the income statement during the year, net *(note 11)*	3,750	122	3,872
匯兑調整	Exchange realignment	1,598	5	1,603
於二零二二年三月三十一日及二零二二年四月一日	At 31 March 2022 and 1 April 2022	43,309	239	43,548
本年度於收益表扣除之遞延稅項淨額*(附註11)*	Deferred tax charged to the income statement during the year, net *(note 11)*	(3,301)	(30)	(3,331)
匯兑調整	Exchange realignment	(3,186)	(17)	(3,203)
於二零二三年三月三十一日之確認於綜合財務狀況表遞延稅項資產淨值	Net deferred tax assets recognized in the consolidated statement of financial position at 31 March 2023	36,822	192	37,014

30. 遞延稅項(續)

就本集團之稅項虧損源於香港、中國大陸及台灣分別為港幣274,976,000元(二零二二年：港幣305,297,000元)、港幣15,568,000元(二零二二年：港幣17,787,000元)及港幣39,914,000元(二零二二年：港幣30,116,000元)，可供抵銷錄得該虧損之公司日後之應課稅溢利。由於該等公司已錄得虧損一段時間，並無預計應課稅溢利於可見將來可供抵扣稅項虧損，故無就該等虧損確認遞延稅項資產。在未確認稅項虧損中，包括港幣15,568,000元(二零二二年：港幣17,787,000元)及港幣39,914,000元(二零二二年：港幣30,116,000元)的虧損分別將於虧損產生後五年及十年內逾期。其他虧損可以無限期累積。

根據新企業所得稅法，於中國大陸成立的外資企業向外國投資者宣派股息時需徵10%扣繳稅，自二零零八年一月一日起生效並適用於二零零七年十二月三十一日後賺取的溢利。倘中國與外國投資者所在司法權區訂有稅務條約，則可能適用較低的扣繳稅稅率。本集團於年內的適用稅率為5%或10%。截至二零二二年三月三十一日止年度內，由於於香港之若干附屬公司符合內地和香港特別行政區關於對所得避免雙重徵稅及防止偷漏稅的安排之資格條件，所以扣繳稅率由10%減至5%。

30. DEFERRED TAX (continued)

The Group has tax losses arising in Hong Kong, Mainland China and Taiwan of HK$274,976,000 (2022: HK$305,297,000), HK$15,568,000 (2022: HK$17,787,000) and HK$39,914,000 (2022: HK$30,116,000), respectively, that are available for offsetting against future taxable profits of the companies in which the losses arose. Deferred tax assets have not been recognized in respect of these losses as they have arisen in those companies that have been loss-making for some time and it is not considered probable that taxable profits will be available against which the tax losses can be utilized in the foreseeable future. Included in unrecognized tax losses are losses of HK$15,568,000 (2022: HK$17,787,000) and HK$39,914,000 (2022: HK$30,116,000) that will expire within five years and ten years, respectively, from the date the losses arose. Other losses can be carried forward indefinitely.

Pursuant to the New Corporate Income Tax Law, a 10% withholding tax is levied on dividends declared to foreign investors from the foreign investment enterprises established in Mainland China. The requirement was effective from 1 January 2008 and applies to earnings after 31 December 2007. A lower withholding tax rate may be applied if there is a tax treaty between the PRC and the jurisdiction of the foreign investors. For the Group, the applicable rate during the year was 5% or 10%. During the year ended 31 March 2022, the withholding tax rate reduced from 10% to 5% as certain subsidiaries in Hong Kong meets the eligibility criteria under the Arrangement between the Mainland of China and Hong Kong Special Administrative Region for the Avoidance of Double Taxation and the Prevention of Fiscal Evasion with Respect to Taxes on Income.

30. 遞延稅項*(續)*

此外，根據台灣扣繳稅條例，向非本地居民股東宣派之股息將被徵收21%（二零二二年：21%）扣繳稅。因此，本集團須就於台灣成立的該等附屬公司產生的溢利所派發之股息繳納扣繳稅。截至二零二二年三月三十一日止年度內，由於於台灣成立之附屬公司，其於荷蘭註冊成立之直接控股公司符合駐荷蘭台北代表處與駐台北荷蘭貿易暨投資辦事處避免所得稅雙重課稅及防杜逃稅協定暨議定書之資格條件，所以就股息派發徵收之扣繳稅率由21%減至10%。

於二零二三年三月三十一日，本集團若干於中國大陸成立的附屬公司未就未匯出溢利的應付扣繳稅確認遞延稅項，其無確認之相關的暫時性差異總值合共約港幣1,532,532,000元（二零二二年：港幣1,626,281,000元）。董事認為，該等附屬公司不大可能於可見未來分配於二零零八年一月一日後賺取之溢利。

於二零二三年三月三十一日，並無就因扣繳稅產生之於台灣成立的附屬公司投資相關的暫時性差異總值而確認的遞延稅項負債合共約港幣48,767,000元（二零二二年：港幣51,771,000元）。

本公司向其股東派發之股息並無任何所得稅之影響。

30. DEFERRED TAX *(continued)*

In addition, pursuant to Taiwan withholding tax regulations, a 21% (2022: 21%) withholding tax is levied on dividends declared to non-resident shareholders. Therefore, the Group is liable for withholding taxes on dividends distributed by those subsidiaries established in Taiwan in respect of earnings generated. During the year ended 31 March 2022, the withholding tax rate on dividends distributed reduced from 21% to 10% as the immediate holding company, which is incorporated in the Netherlands, of the subsidiary established in Taiwan meets the eligibility criteria under the Agreement between the Taipei representative office in the Netherlands and the Netherlands trade and investment office in Taipei for the Avoidance of Double Taxation and the Prevention of Fiscal Evasion with Respect to Taxes on Income.

As at 31 March 2023, no deferred tax has been recognized for withholding taxes that would be payable on the unremitted earnings of certain of the Group's subsidiaries established in Mainland China, of which the aggregate amount of temporary differences has not been recognized totalled approximately HK$1,532,532,000 (2022: HK$1,626,281,000). In the opinion of the directors, it is not probable that these subsidiaries will distribute their earnings accrued after 1 January 2008 in the foreseeable future.

As at 31 March 2023, the aggregate amount of temporary differences associated with the investments in subsidiaries established in Taiwan for which deferred tax liabilities arising from withholding tax have not been recognized totalled approximately HK$48,767,000 (2022: HK$51,771,000).

There are no income tax consequences attaching to the payment of dividends by the Company to its shareholders.

31. 股本

31. SHARE CAPITAL

(港幣千元)	(HK$'000)	2023	2022
法定： 1,000,000,000股普通股 每股港幣0.10元	Authorized: 1,000,000,000 ordinary shares of HK$0.10 each	**100,000**	100,000
已發行及全數繳足： 630,531,600股 （二零二二年：630,531,600股） 普通股每股港幣0.10元	Issued and fully paid: 630,531,600 (2022: 630,531,600) ordinary shares of HK$0.10 each	**63,053**	63,053

32. 購股權

本公司已採納經股東於本公司在二零一四年九月二十四日(「採納日期」)舉行之股東周年大會上批准之購股權計劃(「購股權計劃」)。

根據購股權計劃，本公司董事可酌情邀請任何參與人接納購股權以認購本公司悉數繳足普通股，惟須受當中所述之條款及條件限制。根據購股權計劃授出之購股權並不賦予持有人收取股息或於股東大會上投票之權利。

購股權計劃之詳情載列如下：

(a) 目的

對合資格之參與人於本集團作出或將可作出貢獻而予以獎勵或鼓勵。

32. SHARE OPTIONS

The Company has adopted a share option scheme (the "Share Option Scheme") approved by the shareholders at the annual general meeting of the Company held on 24 September 2014 (the "Adoption Date").

Under the Share Option Scheme, the directors of the Company may, at their discretion, invite any participants to take up share options to subscribe for fully paid ordinary shares in the Company subject to the terms and conditions stipulated therein. Share options under the Share Option Scheme do not confer rights on the holders to dividends or to vote at shareholders' meetings.

The particulars of the Share Option Scheme are as follows:

(a) Purpose

As rewards or incentives for the contribution or potential contribution to the Group from the eligible participants.

32. 購股權*(續)*

(b) 參與人

(i) 本集團任何成員或任何控股股東(根據購股權計劃之定義)或由控股股東控制之任何公司之：

(a) 任何董事(不論是執行或非執行，包括任何獨立非執行董事)及僱員(不論是全職或兼職)，或

(b) 其時借調之任何人；或

(ii) 本集團任何成員或任何控股股東或由控股股東控制之任何公司所發行之任何證券之持有人；或

(iii) 本集團任何成員或任何控股股東或由控股股東控制之公司之：

(a) 任何業務或合作夥伴、特許經營權受讓人、承包商或分銷商，

(b) 任何人士或個體提供研究、發展或其他技術支援或任何諮詢、顧問、專業或其他與業務運作有關之服務，

(c) 貨品或服務之任何供應商，或

(d) 貨品或服務之任何客戶。

32. SHARE OPTIONS *(continued)*

(b) Participants

(i) (a) any director (whether executive or non-executive, including any independent non-executive director) and employee (whether full time or part time) of, or

(b) any individual for the time being seconded to work for,

any member of the Group or any controlling shareholder (as defined under the Share Option Scheme) or any company controlled by a controlling shareholder; or

(ii) any holder of any securities issued by any member of the Group or any controlling shareholder or any company controlled by a controlling shareholder; or

(iii) (a) any business or joint venture partner, franchisee, contractor or distributor of,

(b) any person or entity that provides research, development or other technological support or any advisory, consultancy, professional or other services in respect of business operations to,

(c) any supplier of goods or services to, or

(d) any customer of goods or services of,

any member of the Group or any controlling shareholder or a company controlled by a controlling shareholder.

32. 購股權*(續)*

(b) 參與人*(續)*

就購股權計劃而言，參與人包括由一位或多位隸屬以上任何類別參與人所控制之任何公司。

(c) 可予發行普通股數目上限

於本年報日期，最多達63,053,160股普通股(相等於本公司已發行股本10%)可予發行。

(d) 每位參與人可獲授權益上限

除根據購股權計劃之條款另行批准外，任何參與人在任何十二個月內(截至授出購股權當日止)根據購股權計劃及本公司任何其他購股權計劃獲授之購股權(包括已註銷、已行使及尚未行使之購股權)予以行使時所發行及將發行之普通股上限不得超過本公司已發行普通股的1%。

(e) 可根據購股權認購普通股之期限

由授出購股權之日起計十年內，或本公司董事局於授出時所指定的較短期間。

(f) 購股權獲行使前必須持有之最短期限(如有)

於授出購股權時，本公司董事局將指定購股權獲行使前必須持有之最短期限(如有)。

32. SHARE OPTIONS *(continued)*

(b) Participants *(continued)*

For the purposes of the Share Option Scheme, the participants shall include any company controlled by one or more persons belonging to any of the above classes of participants.

(c) Maximum number of ordinary shares available for issue

A total of 63,053,160 ordinary shares are available for issue, which represent 10% of the issued share capital of the Company as at the date of this annual report.

(d) Maximum entitlement of each participant

The maximum number of ordinary shares issued and to be issued upon exercise of share options granted under the Share Option Scheme and any other share option schemes of the Company to any participant (including cancelled, exercised and outstanding share options), in any 12-month period up to the date of grant shall not exceed 1% of the ordinary shares in issue unless otherwise approved in accordance with the terms of the Share Option Scheme.

(e) Period within which the ordinary shares must be taken up under a share option

Within ten years from the date of grant of the share option or such shorter period as the board of directors of the Company determines at the time of grant.

(f) Minimum period, if any, for which a share option must be held before it can be exercised

At the time of granting a share option, the board of directors of the Company will determine the minimum period(s), if any, for which a share option must be held before it can be exercised.

32. 購股權(續)

(g) 接納購股權須付金額及付款之期限

在提出購股權要約之日起(包括該日)四十五天內須接受有關之要約。於接受每份購股權要約時，須付港幣1.00元。

(h) 釐定購股權行使價之基準

行使購股權時須予支付之每股股份行使價將由本公司董事局釐定，惟行使價須至少為下列最高者：

(i) 於授出購股權之要約日期(必須為營業日)之本公司普通股收市價，而該收市價乃載於聯交所刊發之日報表；

(ii) 於緊接授出購股權之要約日期前五個營業日之本公司普通股平均收市價，而該等收市價乃載於聯交所刊發之日報表；及

(iii) 本公司普通股之面值。

(i) 購股權計劃之有效期

購股權計劃之有效年期由採納日期起計為期十年及於二零二四年九月二十三日屆滿。

截至二零二二年三月三十一日止年內，本公司已於二零二二年一月二十一日(「二零二二年授出日期」)根據購股權計劃向參與人授出合共6,130,000購股權，其中2,500,000購股權授予本公司執行董事(其中一位亦為主要股東)，及3,630,000購股權授予本集團選定僱員。

32. SHARE OPTIONS (continued)

(g) Amount payable upon acceptance of a share option and the period within which the payment must be made

An offer for the grant of a share option must be accepted within forty-five days inclusive of the day on which the offer was made. The amount payable on acceptance of the offer for an option is HK$1.00.

(h) Basis of determining the exercise price of a share option

The exercise price per share payable on the exercise of a share option shall be determined by the board of directors of the Company and shall be no less than the highest of:

(i) the closing price of the ordinary shares of the Company as stated in the daily quotation sheet issued by the Stock Exchange on the date of offer of grant, which must be a business day;

(ii) the average of the closing prices of the ordinary shares of the Company as stated in the daily quotation sheets issued by the Stock Exchange for the five business days immediately preceding the date of offer of grant; and

(iii) the nominal value of an ordinary share of the Company.

(i) Life of the Share Option Scheme

The Share Option Scheme has a life of ten years commencing on the Adoption Date and will expire on 23 September 2024.

During the year ended 31 March 2022, the Company had granted a total of 6,130,000 share options on 21 January 2022 (the "2022 Grant Date") to participants under the Share Option Scheme, amongst which 2,500,000 share options were granted to executive directors (one of whom is also a substantial shareholder) of the Company and 3,630,000 share options were granted to selected employees of the Group.

32. 購股權(續)

行使購股權時須予支付之每股股份行使價為港幣2.49元。本公司普通股於緊接二零二二年授出日期前(即二零二二年一月二十日)之收市價為港幣2.44元。

截至二零二一年三月三十一日止年內，本公司已於二零二零年十一月二十七日(「二零二零年授出日期」)根據購股權計劃向參與人授出合共11,520,000購股權，其中3,400,000購股權授予本公司執行董事(其中一位亦為主要股東)，及8,120,000購股權授予本集團選定僱員。

行使購股權時須予支付之每股股份行使價為港幣2.20元。本公司普通股於緊接二零二零年授出日期前(即二零二零年十一月二十六日)之收市價為港幣2.22元。

於截至二零二三年三月三十一日止年度概無根據購股權計劃購股權獲授出、就調整而獲授出、已行使或被註銷。於二零二三年三月三十一日，本公司概無(二零二二年：無)因行使根據購股權計劃授出的購股權而發行普通股。

年內，根據購股權計劃，以下的購股權尚未行使：

32. SHARE OPTIONS (continued)

The exercise price per share payable on the exercise of a share option is HK$2.49. The closing price of the ordinary shares of the Company immediately before the 2022 Grant Date (i.e. as of 20 January 2022) is HK$2.44.

During the year ended 31 March 2021, the Company had granted a total of 11,520,000 share options on 27 November 2020 (the "2020 Grant Date") to participants under the Share Option Scheme, amongst which 3,400,000 share options were granted to executive directors (one of whom is also a substantial shareholder) of the Company and 8,120,000 share options were granted to selected employees of the Group.

The exercise price per share payable on the exercise of a share option is HK$2.20. The closing price of the ordinary shares of the Company immediately before the 2020 Grant Date (i.e. as of 26 November 2020) is HK$2.22.

No share options were granted, granted for adjustment, exercised or cancelled under the Share Option Scheme during the year ended 31 March 2023. As at 31 March 2023, no ordinary shares (2022: Nil) were issued by the Company as a result of the exercise of share options granted under the Share Option Scheme.

The following share options were outstanding under the Share Option Scheme during the year:

		2023		2022	
		加權平均行使價 *(每股普通股港幣)* **Weighted average exercise price** *(HK$ per ordinary share)*	**購股權數目 Number of share options**	**加權平均行使價** *(每股普通股港幣)* **Weighted average exercise price** *(HK$ per ordinary share)*	**購股權數目 Number of share options**
於年初	At beginning of year	**2.30**	**16,220,000**	2.20	10,890,000
於年內授出	Granted during the year	**–**	**–**	2.49	6,130,000
於年內失效	Lapsed during the year	**2.26**	**(2,130,000)**	2.33	(800,000)
於年末	At end of year	**2.31**	**14,090,000**	2.30	16,220,000

32. 購股權*(續)*

32. SHARE OPTIONS *(continued)*

於報告期末，尚未行使之購股權的行使期及行使價如下：

The exercise periods and exercise prices of the share options outstanding as at the end of the reporting period are as follows:

		於二零二三年三月三十一日 At 31 March 2023	
行使期	Exercise period	行使價* *(每股普通股港幣)* Exercise price* *(HK$ per ordinary share)*	購股權數目 Number of share options
二零二二年十一月二十七日至二零三零年十一月二十六日	27 November 2022 to 26 November 2030	2.20	2,516,000
二零二三年十一月二十七日至二零三零年十一月二十六日	27 November 2023 to 26 November 2030	2.20	786,000
二零二四年十一月二十七日至二零三零年十一月二十六日	27 November 2024 to 26 November 2030	2.20	2,516,000
二零二五年十一月二十七日至二零三零年十一月二十六日	27 November 2025 to 26 November 2030	2.20	786,000
二零二六年十一月二十七日至二零三零年十一月二十六日	27 November 2026 to 26 November 2030	2.20	1,088,000
二零二七年十一月二十七日至二零三零年十一月二十六日	27 November 2027 to 26 November 2030	2.20	1,048,000
二零二四年一月二十一日至二零三二年一月二十日	21 January 2024 to 20 January 2032	2.49	1,631,000
二零二五年一月二十一日至二零三二年一月二十日	21 January 2025 to 20 January 2032	2.49	474,000
二零二六年一月二十一日至二零三二年一月二十日	21 January 2026 to 20 January 2032	2.49	1,631,000
二零二七年一月二十一日至二零三二年一月二十日	21 January 2027 to 20 January 2032	2.49	474,000
二零二八年一月二十一日至二零三二年一月二十日	21 January 2028 to 20 January 2032	2.49	508,000
二零二九年一月二十一日至二零三二年一月二十日	21 January 2029 to 20 January 2032	2.49	632,000
			14,090,000

32. 購股權*(續)*

32. SHARE OPTIONS *(continued)*

		於二零二二年三月三十一日 At 31 March 2022	
行使期	Exercise period	行使價* *(每股普通股港幣)* Exercise price* *(HK$ per ordinary share)*	購股權數目 Number of share options
二零二二年十一月二十七日至二零三零年十一月二十六日	27 November 2022 to 26 November 2030	2.20	2,930,000
二零二三年十一月二十七日至二零三零年十一月二十六日	27 November 2023 to 26 November 2030	2.20	885,000
二零二四年十一月二十七日至二零三零年十一月二十六日	27 November 2024 to 26 November 2030	2.20	2,930,000
二零二五年十一月二十七日至二零三零年十一月二十六日	27 November 2025 to 26 November 2030	2.20	885,000
二零二六年十一月二十七日至二零三零年十一月二十六日	27 November 2026 to 26 November 2030	2.20	1,640,000
二零二七年十一月二十七日至二零三零年十一月二十六日	27 November 2027 to 26 November 2030	2.20	1,180,000
二零二四年一月二十一日至二零三二年一月二十日	21 January 2024 to 20 January 2032	2.49	1,679,000
二零二五年一月二十一日至二零三二年一月二十日	21 January 2025 to 20 January 2032	2.49	552,000
二零二六年一月二十一日至二零三二年一月二十日	21 January 2026 to 20 January 2032	2.49	1,679,000
二零二七年一月二十一日至二零三二年一月二十日	21 January 2027 to 20 January 2032	2.49	552,000
二零二八年一月二十一日至二零三二年一月二十日	21 January 2028 to 20 January 2032	2.49	572,000
二零二九年一月二十一日至二零三二年一月二十日	21 January 2029 to 20 January 2032	2.49	736,000
			16,220,000

* 倘本公司已發行股本出現變化，購股權行使價須作調整。

* The exercise price of the share options is subject to adjustment in the event of any variation in the issued share capital of the Company.

32. 購股權(續)

截至二零二二年三月三十一日止年度內授出之購股權之公平值為港幣1,993,000元(各為港幣0.30元至港幣0.34元)。截至二零二一年三月三十一日止年度內授出之購股權之公平值為港幣4,657,000元(各為港幣0.39元至港幣0.42元)。截至二零二三年三月三十一日止年度內，本集團於收益表確認購股權支出為港幣1,441,000元(二零二二年：港幣1,370,000元)。

截至二零二二年及二零二一年三月三十一日止年度內所授出之以股權支付之購股權之公平值，乃於授出日期使用多項式模型作出估計，經計及授出購股權之條款及條件。下表載列所用模型之主要輸入數據：

32. SHARE OPTIONS (continued)

The fair value of the share options granted during the year ended 31 March 2022 was HK$1,993,000 (HK$0.30 to HK$0.34 each). The fair value of the share options granted during the year ended 31 March 2021 was HK$4,657,000 (HK$0.39 to HK$0.42 each). During the year ended 31 March 2023, the Group recognized a share option expense of HK$1,441,000 (2022: HK$1,370,000) in the income statement.

The fair value of equity-settled share options granted during the years ended 31 March 2022 and 2021 was estimated as at the date of grant, using a polynomial model, taking into account the terms and conditions upon which the options were granted. The following table lists the major inputs to the model used:

		2022	2021
股息收益率(%)	Dividend yield (%)	6.7	4.1
預期波幅(%)	Expected volatility (%)	29.6	29.7
歷史波幅(%)	History volatility (%)	29.6	29.7
無風險利率(%)	Risk-free interest rate (%)	1.5	0.5
購股權預期年期(年)	Expected life of option (year)	10	10
加權平均股價(每股港幣)	Weighted average share price (HK$ per share)	2.49	2.20

購股權預期年期未必反映可能出現之行使模式。預期波幅反映歷史波幅可指示未來趨勢之假設，惟亦未必代表實際結果。

The expected life of the share options is not necessarily indicative of the exercise patterns that may occur. The expected volatility reflects the assumption that the historical volatility is indicative of future trends, which may also not necessarily be the actual outcome.

計算公平值時並無考慮所授出購股權之其他特性。

No other feature of the share options granted was incorporated into the measurement of fair value.

32. 購股權(續)

於二零二三年三月三十一日，本公司根據購股權計劃尚未行使的購股權為14,090,000，佔本公司於該日已發行普通股之約2.23%。於本公司目前的資本架構下，悉數行使尚未行使的購股權將導致本公司發行14,090,000股額外普通股，並錄得額外股本港幣1,409,000元及股份溢價港幣31,141,000元(發行支出前)。

年內，根據購股權計劃授出的2,130,000購股權(二零二二年：800,000購股權)已失效。除上文所披露者外，於截至二零二二年三月三十一日止年度概無購股權獲授出、就調整而獲授出、已行使或被註銷。

於財務報表審批日期，本公司根據購股權計劃尚未行使的購股權為13,640,000，佔本公司於該日已發行普通股之約2.16%。

32. SHARE OPTIONS (continued)

As at 31 March 2023, the Company had 14,090,000 share options outstanding under the Share Option Scheme, which represented approximately 2.23% of the Company's ordinary shares in issue as at that date. The exercise in full of the outstanding share options would, under the present capital structure of the Company, result in the issue of 14,090,000 additional ordinary shares of the Company and additional share capital of HK$1,409,000 and share premium of HK$31,141,000 (before issue expenses).

2,130,000 share options (2022: 800,000 share options) granted under the Share Option Scheme were lapsed during the year. Save as disclosed above, no share option was granted, granted for adjustment, exercised or cancelled during the year ended 31 March 2022.

As at the date of approval of the financial statements, the Company had 13,640,000 share options outstanding under the Share Option Scheme, which represented approximately 2.16% of the Company's ordinary shares in issue as at that date.

33. 儲備

本集團本年度及過往年度的儲備及其變動於財務報表內之綜合權益變動表中呈列。

根據台灣公司法，亞塑機械股份有限公司及震雄機械廠股份有限公司須將一部分稅後溢利轉撥至一不可派發之資本儲備中。惟當該資本儲備達到該公司資本50%時，可將其半數撥充資本，而該資本儲備亦可隨時用於抵銷虧損。

根據中國對外商獨資企業及中外合資經營企業之法例，本公司於中國大陸之附屬公司須轉撥部分稅後溢利至法定儲備(此為被限制使用之儲備)，直至該項儲備累積總額達至其註冊資本50%。

33. RESERVES

The amounts of the Group's reserves and the movements therein for the current and prior years are presented in the consolidated statement of changes in equity of the financial statements.

In accordance with the Company Law of Taiwan, Asian Plastic Machinery Company, Limited and Chen Hsong Machinery Taiwan Company, Limited are required to transfer a portion of their profit after tax to a capital reserve, which is non-distributable. When the capital reserve has accumulated to 50% of their capital, up to 50% of the capital reserve may be capitalized. The capital reserve may be utilized at anytime to offset any deficit.

In accordance with the Law of the PRC on Sole Foreign Investment Enterprises and Sino-foreign equity joint venture enterprises, the Company's Mainland China subsidiaries are required to transfer a portion of their profit after tax to the statutory reserve fund, which is restricted as to use, until the accumulated total reaches 50% of their registered capital.

34. 綜合現金流量報附註

(a) 主要非現金交易

(i) 於年內，購買物業、廠房及設備之非流動訂金為港幣3,117,000元(二零二二年：港幣23,093,000元)轉撥至物業、廠房及設備。

(ii) 於年內，本集團有關物業(二零二二年：物業)租賃安排的使用權資產及租賃負債的非現金添置分別為港幣15,678,000元(二零二二年：港幣5,103,000元)及港幣15,678,000元(二零二二年：港幣5,103,000元)。

(iii) 於年內，已被資本化為使用權資產之物業的重置成本為港幣600,000元，被包括在二零二三年三月三十一日的其他應付賬款及應計負債內。

(iv) 於年內，本集團有關一間附屬公司非控股股東資本投入的無形資產的非現金添置為港幣2,296,000元(二零二二年：港幣2,038,000元)。

34. NOTES TO THE CONSOLIDATED STATEMENT OF CASH FLOWS

(a) Major non-cash transactions

(i) During the year, non-current deposits for purchases of items of property, plant and equipment of HK$3,117,000 (2022: HK$23,093,000) were transferred to property, plant and equipment.

(ii) During the year, the Group had non-cash additions to right-of-use assets and lease liabilities of HK$15,678,000 (2022: HK$5,103,000) and HK$15,678,000 (2022: HK$5,103,000), respectively, in respect of lease arrangements for properties (2022: properties).

(iii) During the year, reinstatement costs of HK$600,000 for the property, which were capitalized as right-of-use asset, were included in other payables and accruals as at 31 March 2023.

(iv) During the year, the Group had non-cash additions to intangible assets of HK$2,296,000 (2022: HK$2,038,000) in respect of a capital contribution by a non-controlling shareholder of a subsidiary.

34. 綜合現金流量報附註*(續)*

34. NOTES TO THE CONSOLIDATED STATEMENT OF CASH FLOWS *(continued)*

(b) 融資活動引起的負債變動

(b) Changes in liabilities arising from financing activities

(港幣千元)	*(HK$'000)*	租賃負債 Lease liabilities	計息銀行貸款 Interest-bearing bank borrowings
於二零二一年四月一日	At 1 April 2021	1,968	68,759
融資現金流量變動	Changes from financing cash flows	(1,597)	(45,000)
新租賃	New leases	5,103	–
融資成本	Finance costs	212	1,094
分類為經營現金流量之已付利息	Interest paid classified as operating cash flows	(212)	(1,094)
外匯變動	Foreign exchange movement	681	(2,191)
於二零二二年三月三十一日及二零二二年四月一日	At 31 March 2022 and 1 April 2022	6,155	21,568
融資現金流量變動	Changes from financing cash flows	(1,511)	(20,458)
新租賃	New leases	15,678	–
融資成本	Finance costs	477	680
分類為經營現金流量之已付利息	Interest paid classified as operating cash flows	(477)	(680)
外匯變動	Foreign exchange movement	(396)	(1,110)
於二零二三年三月三十一日	At 31 March 2023	19,926	–

34. 綜合現金流量報附註*(續)*

(c) 租賃現金流出總額

計入現金流量表的租賃現金流出總額如下：

34. NOTES TO THE CONSOLIDATED STATEMENT OF CASH FLOWS *(continued)*

(c) Total cash outflow for leases

The total cash outflow for leases included in the statement of cash flows is as follows:

(港幣千元)	*(HK$'000)*	**2023**	2022
經營活動內	Within operating activities	**5,009**	4,707
融資活動內	Within financing activities	**1,511**	1,597
		6,520	6,304

35. 承擔

本集團於報告期末的資本承擔如下：

於二零二三年三月三十一日，關於本集團於中國大陸興建之工業建築物，已簽約但未撥備之資本承擔合共約港幣7,366,000元(二零二二年：港幣1,089,000元)。

於二零二三年三月三十一日，關於本集團購買於中國大陸及香港之物業、廠房及設備，已簽約但未撥備之資本承擔合共約港幣18,666,000元(二零二二年：港幣11,692,000元)。

35. COMMITMENTS

The Group had the following capital commitments at the end of the reporting period:

As at 31 March 2023, the Group had capital commitments, which were contracted but not provided for, in respect of the construction of industrial buildings in Mainland China amounting to approximately HK$7,366,000 (2022: HK$1,089,000).

As at 31 March 2023, the Group had capital commitments, which were contracted but not provided for, in respect of the purchase of property, plant and equipment in Mainland China and Hong Kong amounting to approximately HK$18,666,000 (2022: HK$11,692,000).

36. 關連人士交易

年內，本集團有以下的關連人士交易：

(a) 本集團以港幣38,288,000元(二零二二年：港幣38,232,000元)向一聯營公司以雙方協商的價格與條款購買原材料。

(b) 於年內，本集團向達觀有限公司(本公司之控股股東震雄投資的附屬公司)租用物業，為期五年。本集團有選擇權續租額外兩年期。每月應付租賃款項以雙方同意之基礎釐定。就此，涉及租賃之使用權資產港幣14,757,000元及租賃負債港幣14,402,000元於二零二三年三月三十一日的綜合財務狀況表內確認。於年內，使用權資產之折舊港幣178,000元及租賃負債利息支出港幣66,000元於綜合收益表內扣除。

以上與達觀有限公司有關的關連人士交易構成上市規則第14A章定義的關連交易。上市規則第14A章所要求的披露已於董事局報告書的「關連交易」一節中提供。

(c) 本集團主要管理人員薪酬：

36. RELATED PARTY TRANSACTIONS

The Group had the following related party transactions during the year:

(a) The Group purchased raw materials amounting to HK$38,288,000 (2022: HK$38,232,000) from an associate at prices and on terms mutually agreed by the Group and the associate.

(b) During the year, the Group leased a property from Desko Limited, a subsidiary of CH Investments, the controlling shareholder of the Company, for a term of five years. The Group has an option to renew for a further term of two years. The monthly lease payable was determined on a basis mutually agreed by both parties. Accordingly, right-of-use asset of HK$14,757,000 and lease liability of HK$14,402,000 in respect of the lease were recognized in the consolidated statement of financial position as at 31 March 2023. During the year, depreciation of right-of-use asset of HK$178,000 and interest expense on the lease liability of HK$66,000 were charged to the consolidated income statement.

The related party transaction in respect of Desko Limited above constitutes a connected transaction as defined in Chapter 14A of the Listing Rules. The disclosures required by Chapter 14A of the Listing Rules are provided in the section "Connected Transaction" of the Report of the Directors.

(c) Compensation of key management personnel of the Group:

(港幣千元)	*(HK$'000)*	**2023**	2022
短期僱員福利	Short-term employee benefits	**13,785**	14,345
受僱後福利	Post-employment benefits	**36**	36
以股權支付的購股權支出	Equity-settled share option expenses	**718**	591
		14,539	14,972

主要管理人員薪酬乃參照公司表現以及根據個人表現與貢獻而釐定。

The compensation of key management personnel was determined by reference to the Company's performance as well as individual performance and contribution.

37. 金融工具分類

37. FINANCIAL INSTRUMENTS BY CATEGORY

於報告期末，不同類別金融工具之賬面值如下：

The carrying amounts of each of the categories of financial instruments as at the end of the reporting period are as follows:

金融資產

Financial assets

(港幣千元)	(HK$'000)	以攤銷後的成本計價之金融資產 Financial assets at amortized cost 2023	2022
應收貿易及票據賬款	Trade and bills receivables	**1,479,451**	1,345,403
記入訂金、預付款項及其他應收賬款的金融資產	Financial assets included in deposits, prepayments and other receivables	**26,343**	22,989
應收融資租賃賬款	Finance lease receivables	**1,616**	4,682
抵押銀行存款	Pledged bank deposits	**25,843**	27,251
現金及銀行結存	Cash and bank balances	**644,662**	671,911
		2,177,915	2,072,236

金融負債

Financial liabilities

(港幣千元)	(HK$'000)	以攤銷後的成本計價之金融負債 Financial liabilities at amortized cost 2023	2022
應付貿易及票據賬款	Trade and bills payables	**623,367**	695,694
記入其他應付賬款及應計負債的金融負債	Financial liabilities included in other payables and accruals	**161,530**	183,710
計息銀行貸款	Interest-bearing bank borrowings	**–**	21,568
租賃負債	Lease liabilities	**19,926**	6,155
		804,823	907,127

38. 金融工具的公平值及公平值層級

管理層估計現金及銀行結存、抵押銀行存款之流動部分、應收貿易賬款及應收融資租賃賬款之流動部分、應收票據賬款、記入訂金、預付款項及其他應收款項的金融資產、應付貿易及票據賬款、記入其他應付賬款及應計負債的金融負債之流動部分以及計息銀行貸款的公平值與其賬面值相若，主要是由於該等工具於短期內屆滿所致。

應收貿易賬款及應收融資租賃賬款之非流動部分、抵押銀行存款之非流動部分、記入其他應付賬款及應計負債的金融負債之非流動部分及租賃負債的公平值已使用具有類似條款、信貸風險及餘下到期日之工具現時可取得之利率折現預期未來現金流量而估算，其公平值與其賬面值相若。

本集團之財務團隊負責釐定金融工具公平值計量的政策及程序。於各報告日期，財務團隊分析金融工具的價值變動及釐定估值應用的主要輸入數據。估值經審閱及向董事報告。

38. FAIR VALUE AND FAIR VALUE HIERARCHY OF FINANCIAL INSTRUMENTS

Management has assessed that the fair values of cash and bank balances, the current portion of pledged bank deposits, the current portion of trade receivables and finance lease receivables, bills receivable, financial assets included in deposits, prepayments and other receivables, trade and bills payables, the current portion of financial liabilities included in other payables and accruals and interest-bearing bank borrowings approximate to their carrying amounts largely due to the short term maturities of these instruments.

The fair values of the non-current portion of trade receivables and finance lease receivables, the non-current portion of pledged bank deposits, the non-current portion of financial liabilities included in other payables and accruals and lease liabilities are estimated by discounting the expected future cash flows using rates currently available for instruments with similar terms, credit risk and remaining maturities and approximate to their carrying amounts.

The Group's finance team is responsible for determining the policies and procedures for the fair value measurement of financial instruments. At each reporting date, it analyzes the movements in the values of the financial instruments and determines the major inputs applied in the valuation. The valuation is reviewed and reported to directors.

39. 轉讓金融資產

(a) 所有未終止確認的已轉讓金融資產

根據中國票據法之票據背書

下表提供以部分已轉讓金融資產不符合終止確認方式轉讓的應收票據摘要及相關負債：

39. TRANSFERS OF FINANCIAL ASSETS

(a) Transferred financial assets that are not derecognized in their entirety

Bills endorsement under the Law of Negotiable Instruments of the PRC

The following table provides a summary of bills receivable that have been transferred in such a way that part of the transferred financial assets do not qualify for derecognition, together with the associated liabilities:

(港幣千元)	*(HK$'000)*	**2023**	2022
持續獲確認資產賬面值	Carrying amount of assets that continued to be recognized	**55,332**	100,236
相關負債賬面值	Carrying amount of associated liabilities	**55,332**	100,236

於二零二三年三月三十一日，本集團向其若干供應商背書已獲若干中國的當地銀行接受的若干應收票據(「背書票據」)，以結清應付此等供應商的應付貿易賬款。因本集團保留重大風險及回報，包括背書票據的違約風險，故此，其持續確認背書票據的所有賬面值及相關的已結清應付貿易賬款。背書後，本集團對背書票據使用並無任何權利，包括向任何其他第三方出售、轉讓或質押背書票據。

As at 31 March 2023, the Group endorsed certain bills receivable accepted by certain local banks in the PRC (the "Endorsed Bills") to certain of its suppliers in order to settle the trade payables due to such suppliers. Since the Group has retained the substantial risks and rewards, which include default risk relating to the Endorsed Bills, it continued to recognize the full carrying amounts of the Endorsed Bills and the associated trade payables settled. Subsequent to the endorsement, the Group does not retain any rights on the use of the Endorsed Bills, including sales, transfer or pledge of the Endorsed Bills to any other third parties.

39. 轉讓金融資產*(續)*

(b) 所有終止確認的已轉讓金融資產

根據中國票據法之票據背書

於二零二三年三月三十一日，本集團向其若干供應商背書剩餘賬面值為港幣44,965,000元(二零二二年：港幣111,208,000元)已獲若干中國有信譽的銀行接受的若干應收票據(「終止確認背書票據」)，以結清應付此等供應商的應付貿易賬款。終止確認背書票據於報告期末剩餘到期日為一個月至七個月(二零二二年：一個月至七個月)。根據中國票據法，倘銀行欠款，則終止確認背書票據持有人有權向本集團追索(「持續參與」)。因本集團已轉讓被終止確認背書票據有關的絕大部分風險及回報，故此，其終止確認終止確認背書票據的所有賬面值及相關應付貿易賬款。本集團就持續參與終止確認背書票據及購回該等終止確認背書票據的未折現現金流量的最大虧損風險相等於其賬面值。因此，本集團的持續參與終止確認背書票據的公平值並不重大。

於年內，本集團於轉讓終止確認背書票據日期並未確認任何收益或虧損。並無收益或虧損於年內或累計確認自持續參與。該背書於整年平均地作出。

39. TRANSFERS OF FINANCIAL ASSETS *(continued)*

(b) Transferred financial assets that are derecognized in their entirety

Bills endorsement under the Law of Negotiable Instruments of the PRC

As at 31 March 2023, the Group endorsed certain bills receivable accepted by certain reputable banks in the PRC (the "Derecognized Endorsed Bills") to certain of its suppliers in order to settle the trade payables due to such suppliers with a remaining carrying amount in aggregate of HK$44,965,000 (2022: HK$111,208,000). The Derecognized Endorsed Bills have a remaining maturity of 1 month to 7 months at the end of the reporting period (2022: 1 month to 7 months). In accordance with the Law of Negotiable Instruments in the PRC, the holders of the Derecognized Endorsed Bills have a right of recourse against the Group if the banks default (the "Continuing Involvement"). Since the Group has transferred substantially all risks and rewards relating to the Derecognized Endorsed Bills, it has derecognized the full carrying amounts of the Derecognized Endorsed Bills and the associated trade payables. The maximum exposure to loss from the Group's Continuing Involvement in the Derecognized Endorsed Bills and the undiscounted cash flows to repurchase these Derecognized Endorsed Bills is equal to their carrying amounts. Thus, the fair values of the Group's Continuing Involvement in the Derecognized Endorsed Bills are not significant.

During the year, the Group has not recognized any gain or loss on the date of transfer of the Derecognized Endorsed Bills. No gains or losses were recognized from the Continuing Involvement, both during the year or cumulatively. The endorsement has been made evenly throughout the year.

40. 金融風險管理目標及政策

本集團主要金融工具包括現金及銀行結存、抵押銀行存款、應收貿易及票據賬款、應收融資租賃賬款、其他應收賬款、應付貿易及票據賬款、其他應付賬款、應計負債以及計息銀行貸款。

由本集團金融工具所產生的主要風險為利率風險、外幣風險、信貸風險及流動資金風險。有關該等金融工具的風險及減低該等風險的政策載於下文。管理層管理及監察該等風險，以確保及時和有效地施行適當的措施。

利率風險

本集團所面對的市場利率變動風險主要與本集團的浮息銀行貸款有關。本集團緊密監察其利率風險；當有重大利率風險時，會考慮採取措施以減低有關風險。

外幣風險

本集團的外幣風險源於商業交易、已確認的資產及負債，以及於中國大陸、台灣、巴西及荷蘭業務的淨投資。

本集團有外幣交易風險，該等風險源於本集團的大部分銷售及採購交易，是以美元、人民幣、日圓及新台幣為交易貨幣。

管理層緊密監控以美元、人民幣、日圓及新台幣為交易貨幣的交易及投資於中國大陸、台灣、巴西及荷蘭之外幣風險；如有需要，會考慮對沖重大外幣風險。

40. FINANCIAL RISK MANAGEMENT OBJECTIVES AND POLICIES

The Group's principal financial instruments comprise cash and bank balances, pledged bank deposits, trade and bills receivables, finance lease receivables, other receivables, trade and bills payables, other payables, accruals and interest-bearing bank borrowings.

The main risks arising from the Group's financial instruments are interest rate risk, foreign currency risk, credit risk and liquidity risk. The risks associated with these financial instruments and the policies on how to mitigate these risks are set out below. Management manages and monitors these exposures to ensure appropriate measures are implemented in a timely and effective manner.

Interest rate risk

The Group's exposure to the risk of changes in market interest rates relates primarily to the Group's bank loans carrying floating interest rates. The Group monitors its interest rate exposure closely and considers to take measures to reduce significant interest rate exposure, if any.

Foreign currency risk

The Group's foreign exchange risk arises from commercial transactions, recognized assets and liabilities and net investments in operations in Mainland China, Taiwan, Brazil and the Netherlands.

The Group has transactional currency risk exposures. Such risk exposures arise from a substantial portion of the Group's sales and purchases transactions denominated in United States dollars ("US$"), RMB, JPY and New Taiwanese dollars ("NTD").

Management closely monitors foreign exchange exposure in transactions denominated in US$, RMB, JPY and NTD and its investments in Mainland China, Taiwan, Brazil and the Netherlands and will consider hedging significant foreign currency exposure should the need arise.

40. 金融風險管理目標及政策(續)

40. FINANCIAL RISK MANAGEMENT OBJECTIVES AND POLICIES (continued)

外幣風險(續)

Foreign currency risk (continued)

下表列示本集團除稅前溢利於報告期末(在所有其他變數保持不變的情況下)對美元、人民幣、歐元及新台幣匯率的合理可能變動的敏感度(由於貨幣資產及負債的公平值變動)。

The following table demonstrates the sensitivity at the end of the reporting period to a reasonably possible change in US$, RMB, Euro and NTD exchange rates, with all other variables held constant, of the Group's profit before tax (due to changes in the fair value of monetary assets and liabilities).

(港幣千元)	(HK$'000)	外幣匯率增加/(減少) Increase/(decrease) in foreign currency rate	除稅前溢利增加/(減少) Increase/(decrease) in profit before tax
2023			
倘人民幣對港元升值	If RMB strengthens against HK$	5%	8,210
倘人民幣對港元貶值	If RMB weakens against HK$	(5%)	(8,210)
倘人民幣對美元升值	If RMB strengthens against US$	5%	(5,027)
倘人民幣對美元貶值	If RMB weakens against US$	(5%)	5,027
倘歐元對港元升值	If Euro strengthens against HK$	5%	3,034
倘歐元對港元貶值	If Euro weakens against HK$	(5%)	(3,034)
倘新台幣對美元升值	If NTD strengthens against US$	5%	(1,773)
倘新台幣對美元貶值	If NTD weakens against US$	(5%)	1,773
倘人民幣對巴西雷亞爾升值	If RMB strengthens against Brazilian Real ("R$")	5%	(1,703)
倘人民幣對巴西雷亞爾貶值	If RMB weakens against R$	(5%)	1,703
倘美元對巴西雷亞爾升值	If US$ strengthens against R$	5%	(5,313)
倘美元對巴西雷亞爾貶值	If US$ weakens against R$	(5%)	5,313
2022			
倘人民幣對港元升值	If RMB strengthens against HK$	5%	7,981
倘人民幣對港元貶值	If RMB weakens against HK$	(5%)	(7,981)
倘人民幣對美元升值	If RMB strengthens against US$	5%	(491)
倘人民幣對美元貶值	If RMB weakens against US$	(5%)	491
倘歐元對港元升值	If Euro strengthens against HK$	5%	9,709
倘歐元對港元貶值	If Euro weakens against HK$	(5%)	(9,709)
倘新台幣對美元升值	If NTD strengthens against US$	5%	(5,097)
倘新台幣對美元貶值	If NTD weakens against US$	(5%)	5,097
倘人民幣對巴西雷亞爾升值	If RMB strengthens against R$	5%	(3,681)
倘人民幣對巴西雷亞爾貶值	If RMB weakens against R$	(5%)	3,681
倘美元對巴西雷亞爾升值	If US$ strengthens against R$	5%	(3,443)
倘美元對巴西雷亞爾貶值	If US$ weakens against R$	(5%)	3,443

40. 金融風險管理目標及政策(續)

40. FINANCIAL RISK MANAGEMENT OBJECTIVES AND POLICIES (continued)

信貸風險

Credit risk

最大風險及年末階段

Maximum exposure and year-end staging

下表根據本集團的信貸政策(除非有毋須花費不必要成本或精力而取得的資料，否則主要基於過往逾期資料及於三月三十一日的年末階段分類)列出信貸風險的信貸質素及最大信貸風險。呈報金額為金融資產的賬面值總額及財務擔保合同面對的信貸風險。

The tables below show the credit quality and the maximum exposure to credit risk based on the Group's credit policy, which is mainly based on past due information unless other information is available without undue cost or effort, and year-end staging classification as at 31 March. The amounts presented are gross carrying amounts for financial assets and the exposure to credit risk for the financial guarantee contracts.

於二零二三年三月三十一日

At 31 March 2023

		十二個月預期信貸虧損 12-month ECLs	全期預期信貸虧損 Lifetime ECLs			
(港幣千元)	*(HK$'000)*	第一階段 Stage 1	第二階段 Stage 2	第三階段 Stage 3	簡化方式 Simplified approach	總計 Total
應收貿易賬款*	Trade receivables*	–	–	–	1,117,396	1,117,396
應收票據賬款	Bills receivable					
－正常**	- Normal**	454,352	–	–	–	454,352
記入訂金、預付款項及其他應收賬款的金融資產	Financial assets included in deposits, prepayments and other receivables					
－正常**	- Normal**	26,123	–	–	–	26,123
－呆壞**	- Doubtful**	–	–	17,167	–	17,167
應收融資租賃賬款*	Finance lease receivables*	–	–	–	6,104	6,104
抵押銀行存款	Pledged bank deposits					
－未逾期	- Not yet past due	25,843	–	–	–	25,843
現金及銀行結存	Cash and bank balances					
－未逾期	- Not yet past due	644,662	–	–	–	644,662
提供給銀行的擔保，最大數額，用作擔保給予客戶作購買本集團產品的銀行貸款	Guarantee given to a bank, at the maximum, for a bank loan granted to a customer to purchase the Group's products					
－未逾期	- Not yet past due	2,641	–	–	–	2,641
		1,153,621	–	17,167	1,123,500	2,294,288

40. 金融風險管理目標及政策(續)

40. FINANCIAL RISK MANAGEMENT OBJECTIVES AND POLICIES (continued)

信貸風險(續)

Credit risk (continued)

最大風險及年末階段(續)

Maximum exposure and year-end staging (continued)

於二零二二年三月三十一日

At 31 March 2022

		十二個月預期信貸虧損 12-month ECLs	全期預期信貸虧損 Lifetime ECLs			
(港幣千元)	*(HK$'000)*	第一階段 Stage 1	第二階段 Stage 2	第三階段 Stage 3	簡化方式 Simplified approach	總計 Total
應收貿易賬款*	Trade receivables*	–	–	–	976,207	976,207
應收票據賬款	Bills receivable					
–正常**	- Normal**	467,564	–	–	–	467,564
記入訂金、預付款項及其他應收賬款的金融資產	Financial assets included in deposits, prepayments and other receivables					
–正常**	- Normal**	22,754	–	–	–	22,754
–呆壞**	- Doubtful**	–	–	18,474	–	18,474
應收融資租賃賬款*	Finance lease receivables*	–	–	–	10,501	10,501
抵押銀行存款	Pledged bank deposits					
–未逾期	- Not yet past due	27,251	–	–	–	27,251
現金及銀行結存	Cash and bank balances					
–未逾期	- Not yet past due	671,911	–	–	–	671,911
提供給銀行的擔保，最大數額，用作擔保給予客戶作購買本集團產品的銀行貸款	Guarantee given to a bank, at the maximum, for a bank loan granted to a customer to purchase the Group's products					
–未逾期	- Not yet past due	4,180	–	–	–	4,180
提供給銀行的擔保，最大數額，用作擔保給予客戶	Guarantee given to a bank, at the maximum, for guarantee provided to a customer					
–未逾期	- Not yet past due	171	–	–	–	171
		1,193,831	–	18,474	986,708	2,199,013

* 就本集團應用減值撥備簡化方式的應收貿易賬款及應收融資租賃賬款而言，基於撥備矩陣的資料於財務報表附註21及23中披露。

** 當應收票據賬款以及記入訂金、預付款項及其他應收賬款的金融資產並未逾期，以及無資料表明該等金融資產自初始確認後信貸風險顯著增加，則其信貸質素被視為「正常」。否則，金融資產的信貸質素被視為「呆壞」。

* For trade receivables and finance lease receivables to which the Group applies the simplified approach for provision for impairment, information based on the provision matrix is disclosed in notes 21 and 23 to the financial statements.

** The credit quality of the bills receivable and the financial assets included in deposits, prepayments and other receivables is considered to be "normal" when they are not past due and there is no information indicating that the financial assets had a significant increase in credit risk since initial recognition. Otherwise, the credit quality of the financial assets is considered to be "doubtful".

40. 金融風險管理目標及政策(續)

流動資金風險

本集團採用循環流動資金計劃工具，以監察其資金短缺的風險。該工具考慮到金融工具(如：應付貿易及票據賬款)及金融資產(如：應收貿易及票據賬款以及應收融資租賃賬款)的到期日及預測經營現金流量。

本集團的金融負債(包括或然負債)於報告期末(按已訂約未折現的付款額)的到期日分佈如下：

40. FINANCIAL RISK MANAGEMENT OBJECTIVES AND POLICIES (continued)

Liquidity risk

The Group monitors its risk to a shortage of funds using recurring liquidity planning tool. This tool considers the maturity of both its financial instruments (e.g., trade and bills payables) and financial assets (e.g., trade and bills receivables and finance lease receivables) and projected cash flows from operations.

The maturity profile of the Group's financial liabilities (including contingent liabilities) as at the end of the reporting period, based on the contractual undiscounted payments, was as follows:

		2023				
(港幣千元)	*(HK$'000)*	三個月內或按要求 Less than 3 months or on demand	三個月以上及十二個月內 More than 3 months and less than 12 months	一至五年 1 to 5 years	超過五年 Over 5 years	總計 Total
應付貿易及票據賬款	Trade and bills payables	522,501	100,866	–	–	623,367
記入其他應付賬款及應計負債的金融負債	Financial liabilities included in other payables and accruals	159,334	–	2,196	–	161,530
租賃負債	Lease liabilities	671	3,253	14,304	5,390	23,618
提供給銀行的擔保，最大數額，用作擔保給予客戶作購買本集團產品的銀行貸款	Guarantee given to a bank, at the maximum, for a bank loan granted to a customer to purchase the Group's products	2,641	–	–	–	2,641
		685,147	104,119	16,500	5,390	811,156

40. 金融風險管理目標及政策(續)

40. FINANCIAL RISK MANAGEMENT OBJECTIVES AND POLICIES (continued)

流動資金風險(續)

Liquidity risk (continued)

		2022			
(港幣千元)	(HK$'000)	三個月內或按要求 Less than 3 months or on demand	三個月以上及十二個月內 More than 3 months and less than 12 months	一至五年 1 to 5 years	總計 Total
應付貿易及票據賬款	Trade and bills payables	578,958	116,736	–	695,694
記入其他應付賬款及應計負債的金融負債	Financial liabilities included in other payables and accruals	175,552	–	8,158	183,710
租賃負債	Lease liabilities	608	1,420	5,287	7,315
計息銀行貸款	Interest-bearing bank borrowings	21,568	–	–	21,568
提供給銀行的擔保，最大數額，用作擔保給予客戶作購買本集團產品的銀行貸款	Guarantee given to a bank, at the maximum, for a bank loan granted to a customer to purchase the Group's products	4,180	–	–	4,180
提供給銀行的擔保，最大數額，用作擔保給予客戶	Guarantee given to a bank, at the maximum, for guarantee provided to a customer	171	–	–	171
		781,037	118,156	13,445	912,638

40. 金融風險管理目標及政策*(續)*

資本管理

本集團資本管理的主要目標為維護本集團持續經營的能力及保持健康的資本比率，以支持其業務及最大限度地提高股東利益。

本集團根據經濟狀況的變動而管理及調整其資本架構。為保持或調整資本架構，本集團或會調整派予股東的股息、向股東退回資本或發行新股。截至二零二三年三月三十一日及二零二二年三月三十一日止年度內，該等資本管理之目標、政策或程序並無任何改變。

此外，本集團乃透過淨流動資產狀況合共港幣1,990,404,000元(二零二二年：港幣2,042,490,000元)(即總流動資產減總流動負債)監控資本。本集團之政策為維持正淨流動資產結餘。

40. FINANCIAL RISK MANAGEMENT OBJECTIVES AND POLICIES *(continued)*

Capital management

The primary objectives of the Group's capital management are to safeguard the Group's ability to continue as a going concern and to maintain healthy capital ratios in order to support its business and maximize shareholders' value.

The Group manages its capital structure and make adjustments to it in light of changes in economic conditions. To maintain or adjust the capital structure, the Group may adjust the dividend payment to shareholders, return capital to shareholders or issue new shares. No changes were made in the objectives, policies or processes for managing capital during the years ended 31 March 2023 and 31 March 2022.

In addition, the Group monitors capital using the position of net current assets of HK$1,990,404,000 (2022: HK$2,042,490,000), which is total current assets minus total current liabilities. The Group's policy is to maintain a positive balance of the net current assets.

41. 本公司財務狀況表

本公司於報告期末的財務狀況表資料如下：

41. STATEMENT OF FINANCIAL POSITION OF THE COMPANY

Information about the statement of financial position of the Company at the end of the reporting period is as follows:

(港幣千元)	*(HK$'000)*	**2023**	2022
非流動資產	**NON-CURRENT ASSETS**		
於附屬公司之投資	Investments in subsidiaries	**627,081**	770,214
流動資產	**CURRENT ASSETS**		
訂金及其他應收賬款	Deposits and other receivables	**1,228**	759
現金及銀行結存	Cash and bank balances	**65,302**	20,763
流動資產總計	Total current assets	**66,530**	21,522
流動負債	**CURRENT LIABILITIES**		
其他應付賬款及應計負債	Other payables and accruals	**6,568**	10,623
計息銀行貸款	Interest-bearing bank borrowings	**–**	21,568
流動負債總計	Total current liabilities	**6,568**	32,191
流動資產／(負債)淨值	**NET CURRENT ASSETS/(LIABILITIES)**	**59,962**	(10,669)
資產總值減流動負債	**TOTAL ASSETS LESS CURRENT LIABILITIES**	**687,043**	759,545
非流動負債	**NON-CURRENT LIABILITIES**		
其他應付賬款及應計負債	Other payables and accruals	**695**	–
資產淨值	**NET ASSETS**	**686,348**	759,545
權益	**EQUITY**		
已發行股本	Issued share capital	**63,053**	63,053
儲備*(附註)*	Reserves *(note)*	**623,295**	696,492
權益總計	**TOTAL EQUITY**	**686,348**	759,545

41. 本公司財務狀況表*(續)*

附註：

本公司之儲備概要如下：

41. STATEMENT OF FINANCIAL POSITION OF THE COMPANY *(continued)*

Note:

A summary of the Company's reserves is as follows:

(港幣千元)	*(HK$'000)*	股份溢價賬 Share premium account	資本贖回儲備 Capital redemption reserve	資本儲備 Capital reserve	保留溢利 Retained profits	總計 Total
於二零二一年四月一日	At 1 April 2021	509,580	295	445	166,262	676,582
本年度溢利及本年度總全面收益	Profit for the year and total comprehensive income for the year	–	–	–	123,839	123,839
以股權支付的購股權安排	Equity-settled share option arrangements	–	–	1,370	–	1,370
截至二零二一年三月三十一日止年度之末期股息*(附註12)*	Final dividend for the year ended 31 March 2021 *(note 12)*	–	–	–	(72,511)	(72,511)
中期股息*(附註12)*	Interim dividend *(note 12)*	–	–	–	(32,788)	(32,788)
於二零二二年三月三十一日及二零二二年四月一日	At 31 March 2022 and 1 April 2022	509,580	295	1,815	184,802	696,492
本年度溢利及本年度總全面收益	Profit for the year and total comprehensive income for the year	–	–	–	26,878	26,878
以股權支付的購股權安排	Equity-settled share option arrangements	–	–	1,441	–	1,441
截至二零二二年三月三十一日止年度之末期股息*(附註12)*	Final dividend for the year ended 31 March 2022 *(note 12)*	–	–	–	(73,142)	(73,142)
中期股息*(附註12)*	Interim dividend *(note 12)*	–	–	–	(28,374)	(28,374)
於二零二三年三月三十一日	At 31 March 2023	509,580	295	3,256	110,164	623,295

資本儲備包括已授出但尚未行使的購股權之公平值，並於財務報表附註3內基於股權的支付交易之會計政策進一步解釋。該金額將於相關購股權獲行使時被轉至股份溢價，或於相關購股權屆滿或被沒收時被轉至保留溢利。

The capital reserve comprises the fair value of share options granted which are yet to be exercised, as further explained in the accounting policy for share-based payment transactions in note 3 to the financial statements. The amount will either be transferred to share premium when the related share options are exercised, or be transferred to retained profits when the related share options expire or are forfeited.

42. 比較金額

若干比較金額已重新分類以符合本年度內的呈報。

42. COMPARATIVE AMOUNTS

Certain comparative amounts have been reclassified to conform to the current year's presentation.

43. 財務報表審批

此財務報表已於二零二三年六月二十六日經董事局審批及授權刊發。

43. APPROVAL OF THE FINANCIAL STATEMENTS

The financial statements were approved and authorized for issue by the board of directors on 26 June 2023.

主要附屬公司
於二零二三年三月三十一日

Principal Subsidiaries
As at 31 March 2023

下表所載列之公司為董事認為對本年度業績產生重大影響或構成本集團資產淨值主要部分之附屬公司。董事並認為，列出其餘附屬公司之詳情將過於冗長。

The table below lists the subsidiaries of the Company which, in the opinion of the directors, principally affected the results for the year or formed a substantial portion of the net assets of the Group. To give details of other subsidiaries would, in the opinion of the directors, result in particulars of excessive length.

公司名稱 Company name	成立／註冊及經營地區 Place of incorporation/registration and operations	已發行股本／實收資本 Issued share/paid-up capital	本公司持有權益百分比 Percentage of equity attributable to the Company	主要業務 Principal activities
間接持有 **Held indirectly**				
亞塑機械股份有限公司[5] Asian Plastic Machinery Company, Limited[5]	台灣 Taiwan	普通股 Ordinary 新台幣50,000,000元 NTD50,000,000	100	銷售注塑機 Sale of plastic injection moulding machines
Chen Hsong Europe B.V.	荷蘭 Netherlands	普通股 Ordinary 100,000歐元 Euro100,000	100	銷售注塑機 Sale of plastic injection moulding machines
震雄工業園（深圳）有限公司[1] Chen Hsong Industrial Park (Shenzhen) Company Limited[1]	中國/中國大陸 PRC/Mainland China	3,000,000美元 US$3,000,000	100	持有物業 Property holding
震雄機器廠有限公司 Chen Hsong Machinery Company, Limited	香港 Hong Kong	普通股港幣2元 Ordinary HK$2 無投票權遞延股份[4] 港幣50,000,000元 Non-voting deferred [4] HK$50,000,000	100 –	銷售注塑機 Sale of plastic injection moulding machines
震雄機械(寧波)有限公司[1] [5] Chen Hsong Machinery (Ningbo) Company, Limited[1] [5]	中國/中國大陸 PRC/Mainland China	8,010,000美元 US$8,010,000	100	製造及銷售注塑機 Manufacture and sale of plastic injection moulding machines

公司名稱 **Company name**	成立／註冊及經營地區 **Place of incorporation/ registration and operations**	已發行股本／實收資本 **Issued share/ paid-up capital**	本公司持有權益百分比 **Percentage of equity attributable to the Company**	主要業務 **Principal activities**
間接持有*(續)* **Held indirectly** *(continued)*				
震雄機械(深圳)有限公司[3] [5] Chen Hsong Machinery (Shenzhen) Company Limited[3] [5]	中國/中國大陸 PRC/Mainland China	17,130,000美元 US$17,130,000	100	製造及銷售注塑機 Manufacture and sale of plastic injection moulding machines
震雄機械廠股份有限公司[5] Chen Hsong Machinery Taiwan Company, Limited[5]	台灣 Taiwan	普通股 Ordinary 新台幣165,000,000元 NTD165,000,000	100	製造及銷售注塑機 Manufacture and sale of plastic injection moulding machines
震雄機電設備(深圳)有限公司[1] [5] Chen Hsong Mechanical and Electrical Equipment (Shenzhen) Co., Ltd.[1] [5]	中國/中國大陸 PRC/Mainland China	港幣24,000,000元 HK$24,000,000	100	製造及銷售哥林柱 Manufacture and sale of tie bars
震雄營銷 (深圳) 有限公司[1] [5] Chen Hsong Sales & Marketing (Shenzhen) Company, Limited[1] [5]	中國/中國大陸 PRC/Mainland China	港幣10,000,000元 HK$10,000,000	100	銷售注塑機 Sale of plastic injection moulding machines
Chen Hsong South America Importação, Exportação e Comércio de Equipamentos Ltda.	巴西 Brazil	巴西雷亞爾5,721,000 R$5,721,000	100	銷售注塑機 Sale of plastic injection moulding machines
佛山市順德區震德塑料機械有限公司[3] [5] Foshan Shunde Chen De Plastics Machinery Company Limited[3] [5]	中國/中國大陸 PRC/Mainland China	7,300,000美元 US$7,300,000	100	製造及銷售注塑機 Manufacture and sale of plastic injection moulding machines

公司名稱 **Company name**	成立／註冊及經營地區 **Place of incorporation/ registration and operations**	已發行股本／實收資本 **Issued share/ paid-up capital**	本公司持有權益百分比 **Percentage of equity attributable to the Company**	主要業務 **Principal activities**
間接持有*(續)* **Held indirectly** *(continued)*				
佛山市順德區震德精密機械有限公司[3] [5] Foshan Shunde Chen De Precision Machinery Co., Limited[3] [5]	中國/中國大陸 PRC/Mainland China	7,900,000美元 US$7,900,000	100	製造及銷售注塑機 Manufacture and sale of plastic injection moulding machines
佛山市順德區中意液壓有限公司[1] [5] Intra-Italia Hydraulics (Foshan Shunde) Co., Ltd.[1] [5]	中國/中國大陸 PRC/Mainland China	3,000,000美元 US$3,000,000	100	製造及銷售液壓馬達 Manufacture and sale of hydraulic motors
深圳震雄精密設備有限公司[2] [5] Shenzhen Chen Hsong Precision Equipment Limited[2] [5]	中國/中國大陸 PRC/Mainland China	12,000,000美元 US$12,000,000	100	製造及銷售鑄件 Manufacture and sale of casting parts

附註：

(1) 此等公司為外商獨資企業。

(2) 此公司為中外合資經營企業。

(3) 此等公司為外商投資企業。

(4) 無投票權遞延股份有受限制權利收取股息，無權在股東大會上投票及有受限制權利於清盤時收取發還資本後之盈餘。

(5) 英文公司名稱僅供識別。

Notes:

(1) These companies are wholly foreign-owned enterprises.

(2) This company is a Sino-foreign equity joint venture.

(3) These companies are foreign invested enterprises.

(4) The non-voting deferred shares carry limited rights to dividends, no rights to vote at general meetings and limited rights to receive any surplus in a return of capital in a winding-up.

(5) English company names are translated for identification purposes only.

五年財務摘要 Five-Year Financial Summary

以下為摘錄自本集團過往五個財政年度已公布及經審核之財務報表的業績、資產、負債及非控股權益。

A summary of the results and of the assets, liabilities and non-controlling interests of the Group for the last five financial years, as extracted from the published audited financial statements, is set out below.

業績 RESULTS

截至三月三十一日止年度 *Year ended 31 March*

(港幣千元)	*(HK$'000)*	**2023**	2022	2021	2020	2019
收益	**Revenue**	**2,312,584**	2,728,763	2,360,553	1,513,363	1,635,938
經營溢利	Profit from operating activities	**161,012**	239,097	270,013	150,855	124,918
融資成本	Finance costs	**(1,157)**	(1,306)	(1,948)	(2,583)	(1,954)
應佔聯營公司溢利減虧損	Share of profits less losses of associates	**(914)**	777	2,737	738	1,043
除稅前溢利	Profit before tax	**158,941**	238,568	270,802	149,010	124,007
所得稅支出	Income tax expense	**(30,156)**	(24,574)	(65,977)	(55,962)	(34,778)
本年度溢利	Profit for the year	**128,785**	213,994	204,825	93,048	89,229
歸屬於：	Attributable to:					
本公司權益持有人	Equity holders of the Company	**130,289**	213,309	203,021	93,651	90,279
非控股權益	Non-controlling interests	**(1,504)**	685	1,804	(603)	(1,050)
		128,785	213,994	204,825	93,048	89,229

資產、負債及非控股權益 ASSETS, LIABILITIES AND NON-CONTROLLING INTERESTS

於三月三十一日 *As at 31 March*

(港幣千元)	*(HK$'000)*	**2023**	2022	2021	2020	2019
資產總值	Total assets	**4,149,309**	4,429,327	4,378,438	3,442,573	3,451,745
負債總值	Total liabilities	**(1,081,128)**	(1,200,865)	(1,365,392)	(764,263)	(685,669)
非控股權益	Non-controlling interests	**(19,041)**	(19,413)	(16,514)	(13,559)	(14,144)
		3,049,140	3,209,049	2,996,532	2,664,751	2,751,932

投資物業詳情
於二零二三年三月三十一日

Particulars of Investment Properties
As at 31 March 2023

地點 Location	現時用途 Existing use	租約類型 Type of lease	本集團 應佔權益 Attributable interest of the Group	總樓面面積 （平方米） Gross floor area (sq. m.)
中國 廣東省深圳市 坪山區 坑梓街道 人民西路177號 震雄工業園 12-B幢、13-B幢及B區食堂大樓 Block 12-B, Block 13-B and canteen building in District B Chen Hsong Industrial Park 177 Renmin West Road Kengzi Sub-District Pingshan District Shenzhen, Guangdong Province The PRC	工業 Industrial	中期 Medium	100%	約72,000 Approximately 72,000

震雄集團有限公司
Chen Hsong Holdings Limited

香港威非路道18號萬國寶通中心20樓2001室
Unit 2001, 20th Floor, Citicorp Centre, 18 Whitfield Road, Hong Kong

電話 / Tel : (852) 2665 3222
傳真 / Fax: (852) 2664 8202
網址 / Website: www.chenhsong.com
電郵 / E-mail: comm@chenhsong.com